Three Phases Transformer by Overlay

3D Application Note Summary ***(Qualified with Delaunay mesher and User memory mode)***

Note: This example was achieved by Spin.

SPIN
Applicazioni Magnetiche Srl

Introduction

This application note presents the modeling of a three phases power transformer with Flux 3D, using 2 macros (pyFlux).

Keywords

Applications	Flux main functions	Post-processed quantities
• Steady State AC Magnetic	• Magnetic cut (3D) • Non meshed coil (3D) • Circuit Coupling • Macro	• Magnetic quantities • Joule losses • Inductance computation, Reactance computation

Studied device

The studied device, represented in figure below, is a power transformer.

It includes the following elements:

- the magnetic core (green) which has 3 legs
- 1 high voltage and 1 low voltage windings around each leg

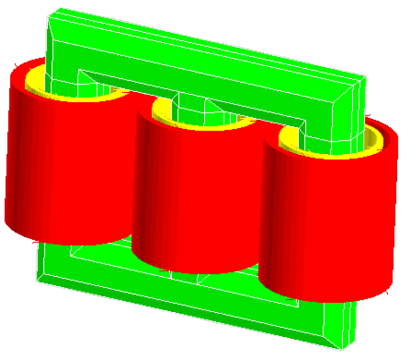

Example 1: Geometry construction of the core

The construction is achieved using a macro that encapsulates all construction commands and allows the geometric parameterization of the core.

To do this operation, follow these instructions:

1. Open the example from the Supervisor

   → *The macro is already loaded*
2. In Flux, open the macro **Transformer3PhasesOctagonalSectionGeo.PFM**

   by clicking on the icon
3. Choose dimensions of three phases transformer
4. Validate by **OK** and save the project

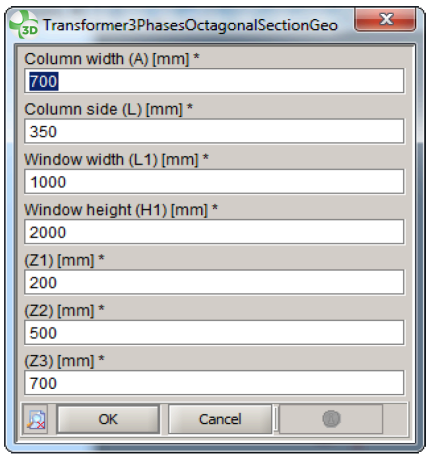

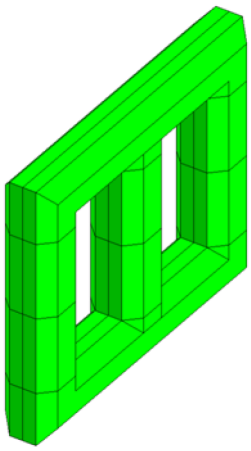

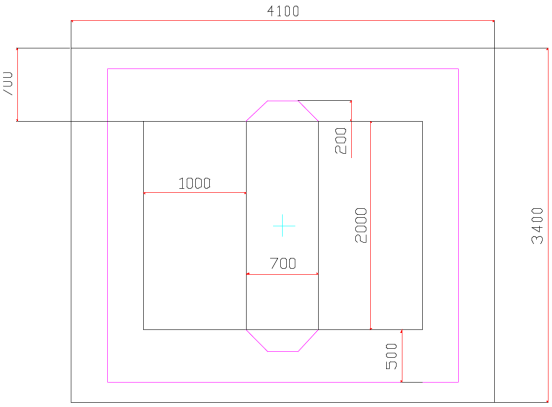

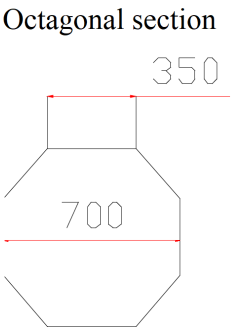

Example 2: Short circuit test

The second example allows the full modeling of a short circuit test, using 2 macros.

The process is explained below:

1. Execution of the macro 1 **Transformer3PhasesOctagonalSectionGeo.PFM**

   → *Flux builds the geometry*
2. Execution of the macro 2 **Transformer3PhasesOctagonalSectionShortCircuit.PFM**

   → *Flux achieves the mesh, the description of the physics, solving, postprocessing and saves project*
3. Saving of the project

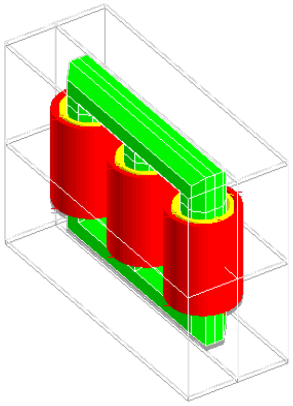

Short Circuit Voltage

HIGH VOLTAGE

Volume of the coil (m^3)
0.4644200711838523
Mass of the coil (Kg)
0.0
Equivalent resistance (Ω)
0.10767383358773931

LOW VOLTAGE
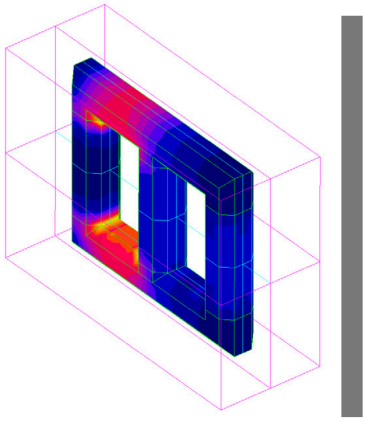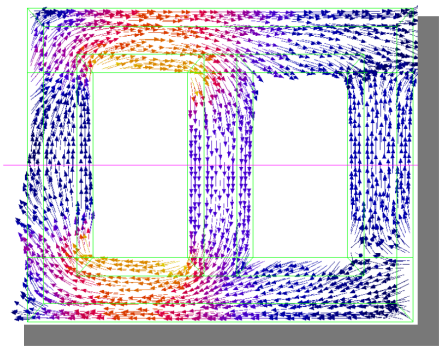
Volume of the coil (m^3)
0.2707154371895475
Mass of the coil (Kg)
0.0
Equivalent resistance (Ω)
0.003964385030495683