Altair® Flux®

Rotating motion tutorial

3D technical example

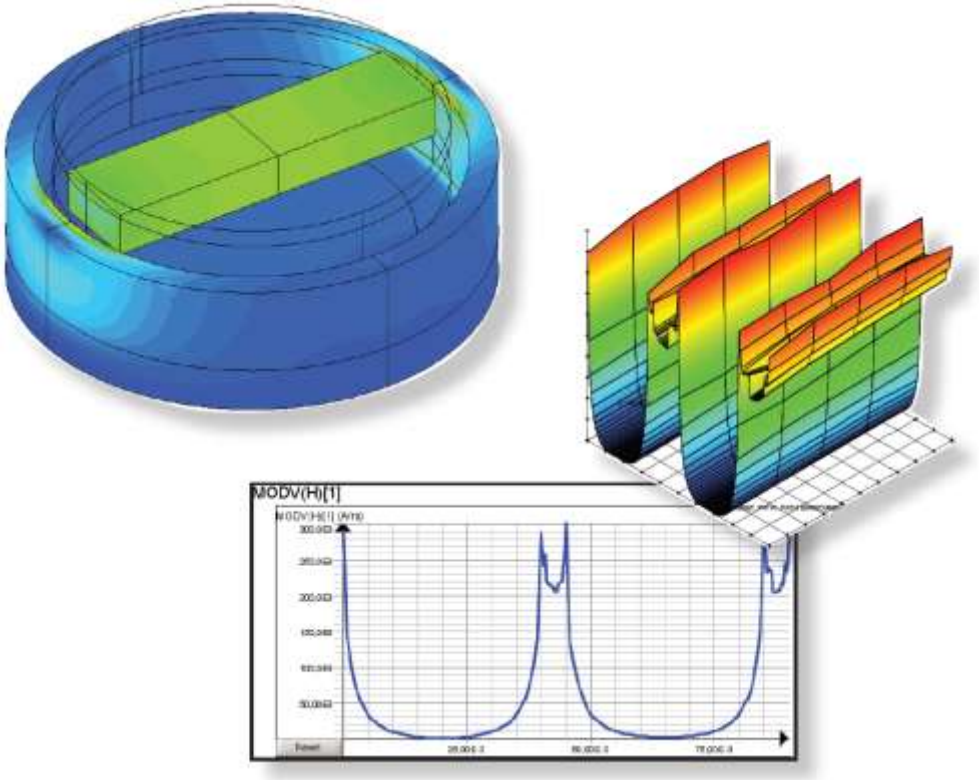

ALTAIR

This tutorial was edited on 8 November 2022

Altair
15 Chemin de Malacher - Inovallée
38246 Meylan Cedex
FRANCE
Phone: +33 (0)4 76 90 50 45
Fax: +33 (0)4 56 38 08 30

Web: http://www.altair.com

Foreword

*(Please read before starting this document)

Description of the example

The goal of this technical example is to demonstrate the ability and advantage of Flux for the simulation of speedo meter computation problems. This document contains the general steps and all the data needed to describe the different simulations.

To begin

This example is designed for the user who is already familiar with the basic functions of Flux software.
For beginner users, please report to the "Flux Starting Guide" opened automatically by the supervisor. (If not opened, please open it by clicking on the button "?" on the top right of the supervisor). The interface contains videos, which helps the beginners while using Flux for the first time

Support files included...

To view the completed stages of the example project, the user will find the .py files, including the geometry, mesh, physics and post-processing descriptions. The .py files corresponding to the different study cases in this example are available in the folder:
…\DocExamples\Examples3D\Tutorial_Technical\RotatingMotion

Supplied files are command files written in Pyflux language. The user can launch them in order to automatically produce the Flux projects for each case.

(*.py files are launched by accessing **Project/Command file from the Flux drop down menu.)*

Supplied files		Contents	Flux file obtained after launching the .py file
CASE1	buildGeomesh.py	Geometry and mesh	…\geomeshbuilt
	buildPhys.py	physics	…\physbuilt
	solving.py	Solving process	…\solved
	postprocessing.py	Post processing	…\postprocessed
CASE2	TESTCASE_INI.FLU	Initial Flux project	
	buildphys.py	Physics	…\physbuilt
	solving.py	Solving process	…\solved
	postprocessing.py	Post processing	…\postprocessed
CASE3	TESTCASE_INI.FLU	Initial Flux project	
	buildPhys.py	physics	…\physbuilt
	solving.py	Solving process	…\solved
	postprocessing.py	Post processing	…\postprocessed

Continued on next page

Supplied files		Contents	Flux file obtained after launching the .py file
CASE4	TESTCASE_INI.FLU	Initial Flux project	
	buildPhys.py	physics	…\physbuilt
	solving.py	Solving process	…\solved
	postprocessing.py	Post processing	…\postprocessed

Note : some directories may contain a main.py enabling the launch of the other command files

TABLE OF CONTENTS

1. General information

Introduction

This chapter contains the presentation of the **studied device** and the **Flux software**.

Contents

This part contains the following topics:

1.1. Overview

Introduction

This section presents the studied device (a speedometer) and the strategy of the device description in Flux.

Contents

This section contains the following topics:

1.1.1. Description of the device

Study carried out

The study proposed in this "*Rotating Motion tutorial*" is the study of the permanent magnet of a speedometer (transducer) used to display automobile speed.

Studied device

The studied device, represented in the figure below, includes the following elements:

- a fixed metallic frame (non-conductive)
- a mobile permanent magnet, magnetized along its length
- two fixed rectangular flat coils, perpendicular to each other, surrounding the permanent magnet

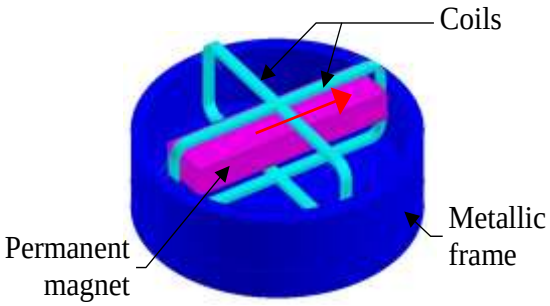

Operating principle

The operation of the device is explained below:

- a speed sensor measures the automobile speed and sends the information in the form of electric currents to the transducer coils
- the angular position of the mobile permanent magnet is a function of the current value through the two coils, and thus, the automobile speed is displayed by a needle, attached to the magnet
- the operation of this device can be considered equivalent to that of a compass

Continued on next page

Geometry

The transducer is composed of two main parts – fixed and movable.

The dimensions (in millimeters) of the modeled movable part – permanent magnet and the mobile air volume – are presented in the figures below.

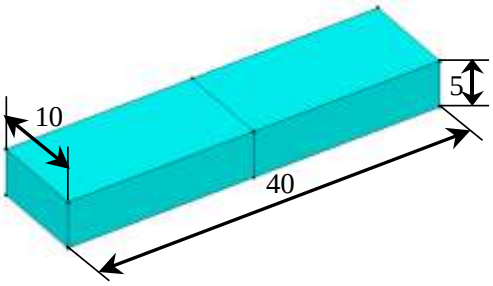

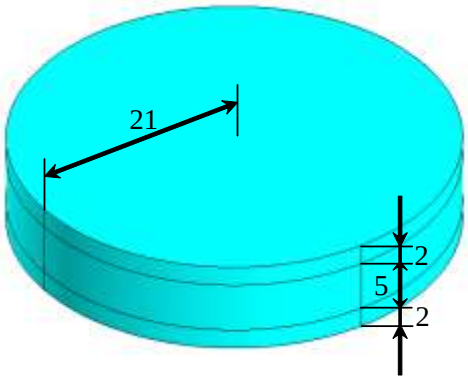

The dimensions (in millimeters) of the modeled fixed part – the metallic frame and coils – are presented in the figures below

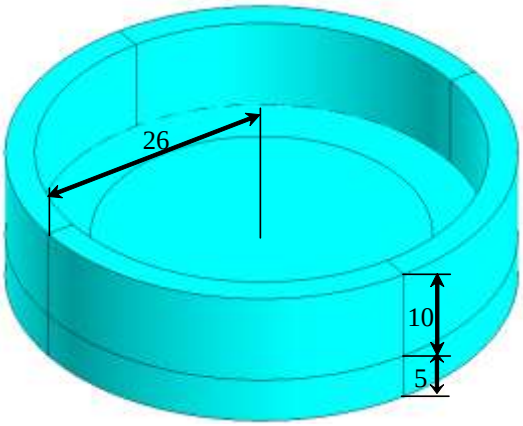

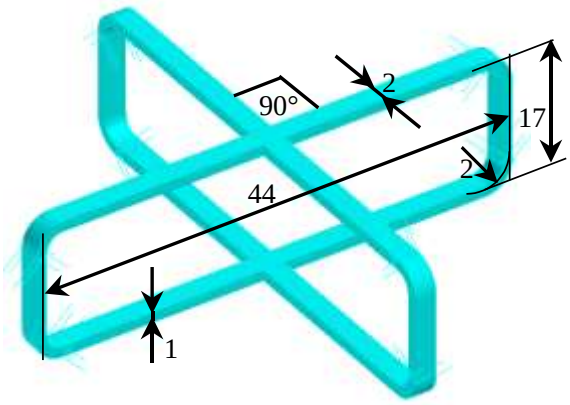

Materials

The transducer is composed of the following materials:

- the permanent magnet material is made of samarium-cobalt, an homogeneous and isotropic rare earth material, magnetized along its longitudinal axis
- the metallic frame material is made of magnetic steel with a nonlinear B(H) characteristic

Sources

The sources of the magnetic field are represented by:

- the magnetic energy stored in the permanent magnet
- the current flowing through the two coils

1.1.2. Studied cases

Studied cases

Four cases are carried out:

- case 1: a multi-parameter study
- case 2: a study using a multi-static kinematic model
- case 3: a study using a coupled load kinematic model
- case 4: a study using an imposed speed kinematic model

Case 1

The first case is a multi-parameter study.

In the first case, a magneto static analysis of the transducer is performed. The movable part is immobilized to a specified angular position. Two parameters are studied:

- the current through the coils, which varies from 0.02 A to 0.1 A with a step of 0.02 A
- the frame radius, which varies from 26 mm to 28 mm with a step of 0.5 mm

Case 2

The second case is a study using a multi-static kinematic model.

In the second case, a magneto static analysis of the transducer is performed. The movable part of the device takes different angular positions, from 0° to 90° with a step of 1°. The two coils are supplied with the same current of 0.06 A.

Case 3

The third case is a study using a coupled load kinematic model.

In the third case, a transient magnetic analysis of the transducer is performed. The dynamic behaviour of the magnet is studied for a period of 10 s with a step of 0.25 s. The two coils are supplied with the same current of 0.06 A.

Case 4

The fourth case is a study using an imposed speed kinematic model.

In the last case, a transient magnetic analysis of the transducer is performed. The movable part of the device is driven at a constant speed. The induced voltage on a coil is studied for a period of 0.06 s with a step of $0.5e^{-3}$ s. The two coils are not supplied.

1.2. Strategy to build the Flux project

Introduction

This section presents outlines of the geometry building process, mesh generating process and physical properties description process of the speedometer.

Contents

This section contains the following topics:

1.2.1. Main stages for geometry description

Outline

An outline of the **geometry description** of the device is presented in the table below.

Stage	Description	
1	Creation of geometric tools to simplify the geometry construction	• Geometric parameters: 1. X_MAG (half width of the magnet) 2. Y_MAG (half length height of the magnet) 3. Z_MAG (half height of the magnet) 4. RADIUS (external radius of the frame) 5. THICKNESS (thickness of the frame) 6. DEPTH (height of the upper tubular part of the frame) 7. BOTTOM (height of the bottom part of the frame) • Coordinate systems: 1. MAIN 2. MOBILE 3. FIXED 4. COIL_A 5. COIL_B • Transformations: 1. TRX_MAGNET (translation for the magnet width) 2. TRY_MAGNET (translation for the magnet length) 3. TRZ_MAGNET (translation for the magnet height) 4. TRZ_AIRGAP (translation for the 2 air gap of the magnet) 5. TRZ_BOTTOM (translation for the frame bottom) 6. TRZ_DEPTH (translation for the upper tubular part of the frame) 7. ROTZ_AIRMAG (rotation for the air volume surrounding the magnet) 8. ROTZ_FRAME (rotation for the frame circumference)
2	Creation of points and lines of the permanent magnet	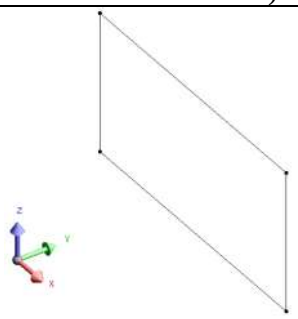

3	Creation of faces and volumes by extrusion of the permanent magnet	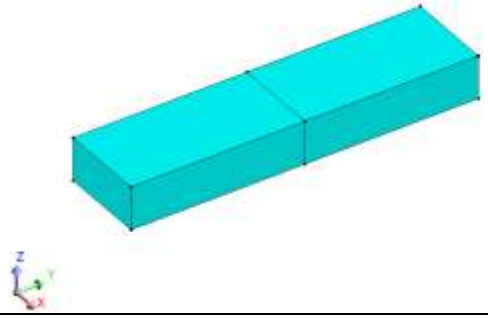
4	Creation of points and lines by extrusion of the mobile air volume	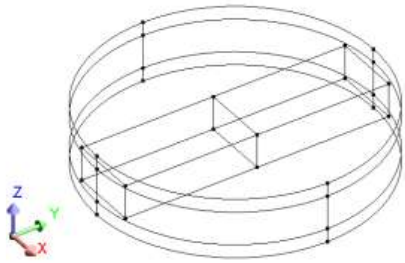
5	Creation of faces and volumes of the mobile air volume	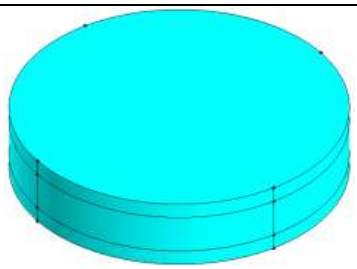
6	Creation of points and lines by extrusion of the frame	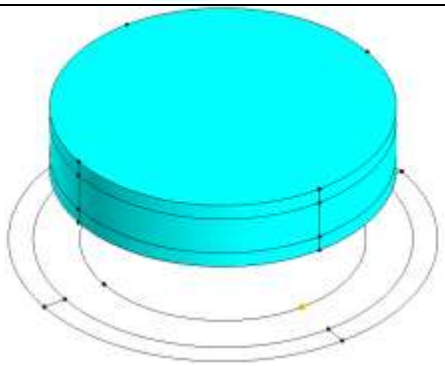
7	Creation of faces and volumes by extrusion of the frame	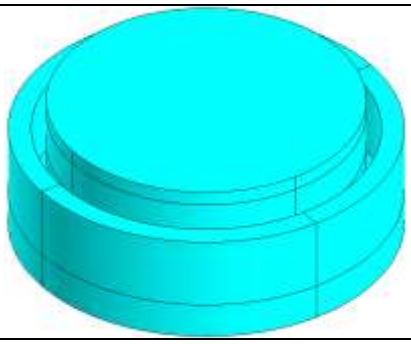

8	Creation of an infinite box	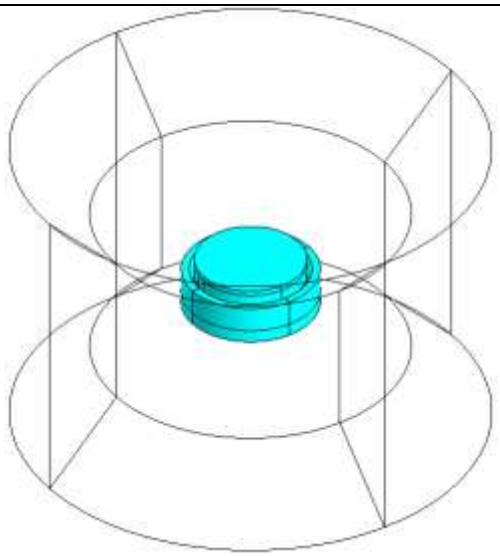

1.2.2. Main stages for mesh generation

Outline

An outline of the **mesh generating process** of the transducer is presented in the table below.

Stage	Description	
1	Meshing the device and analyze of the mesh	Mesh with the default settings of AIDED MESH. It is possible to improve the mesh quality
2	Assign the mapped mesh generator	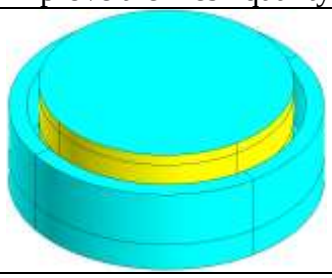
3	Modification of the AIDED MESH	Increase the deviation value and the shadowface. Decrease all the relaxation.
4	Creation and assignment of 2 local meshpoint	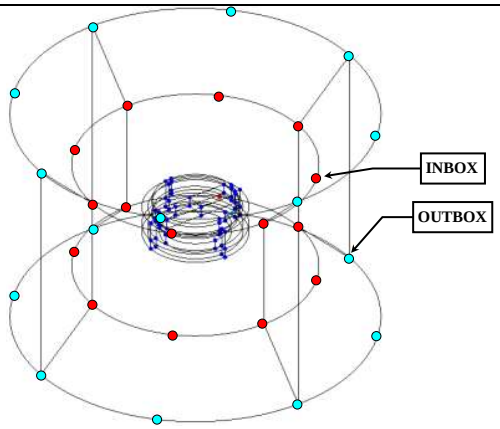
5	Creation and assignment of 1 local meshline	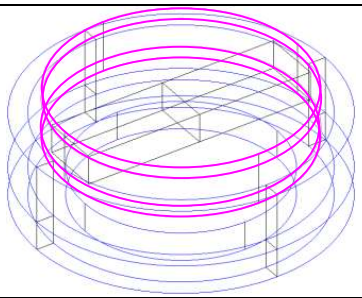
6	Meshing: • meshing lines • meshing faces • meshing volumes • generating 2nd order mesh elements	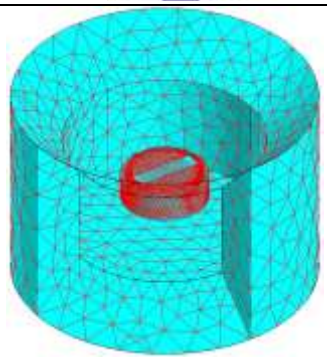

1.2.3. Main stages for physical description

Outline

An outline of the **physical description process** of the transducer is presented in the table below.

Stage	Description	
1	Definition of the application	Magneto Static 3D
2	Creation of 2 materials	• SMCO – homogeneous and isotropic material with a vector direction of the magnetization • STEEL – material with a nonlinear B(H) characteristic
3	Creation of volume regions	• INFINITE region – air of the infinite box • FIXED AIR region – air surrounding the frame and the mobile part • MOBILE AIR region – air surrounding the magnet • FRAME region • MAGNET region
4	Assignment of volume regions	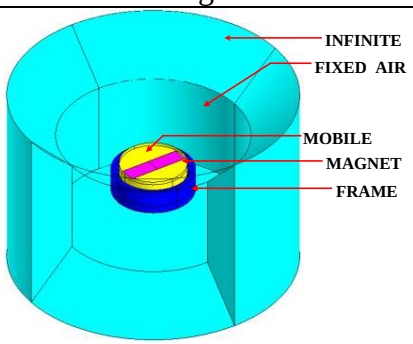
5	Creation of sources	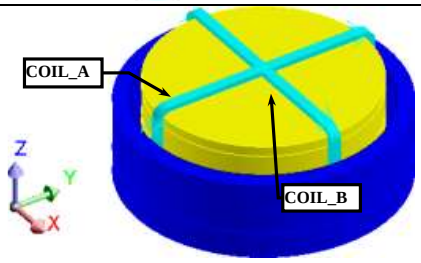

1.3. Kinematic coupling: theoretical aspects

Introduction

This section explains the theoretical aspects of the kinematic coupling in Flux environment.

Contents

This chapter contains the following topics:

Reading advice

The theoretical aspects of kinematic coupling are presented in the User's guide (see volume 2 "Kinematic coupling: principles")

1.3.1. Kinematic models

Introduction

This paragraph deals with the different kinematic models available to analyze devices with movable and fixed parts in Flux:

- “multi-static” model
- “imposed speed” model
- “coupled load” model

Multi-static kinematic model

In the **multi-static** kinematic model, the movable part of the device is immobilized.

The computation of the electromagnetic field is carried out for various arbitrary relative positions of movable and fixed parts. This model does not take into consideration the dynamics equation and it is equivalent to a parameterized study where the position of the movable part is a varying parameter.

In this kinematic model, the physical application usually used is the Magneto Static physical application.

Imposed speed kinematic model

In the **imposed speed** kinematic model, the movable part is considered as moving at a constant velocity with respect to the fixed part.

The computation of the electromagnetic field is carried out for the different positions defined by the imposed speed of the movable part. As in the multi-static kinematic model, the dynamics equation is not considered.

In this kinematic model, the physical application used is the Transient Magnetic physical application.

Coupled load kinematic model

In the **coupled load** kinematic model, the movable part drives an external device that represents the mechanical load of the studied device.

This is the model where the **magneto-mechanical coupling** is considered. Actually, both magnetic and the kinematic aspects of a problem can be dealt with. This kinematic model takes into consideration the dynamics equation.

In this kinematic model, the physical application used is the Transient Magnetic physical application.

1.3.2. Magneto-mechanical coupling

Introduction

The **magneto-mechanical coupling** takes into account the magnetic and kinematic aspects of the studied device. The magnetic behavior is described by Maxwell's equations and the kinematic behavior is described by the basic dynamics equation.

Fundamental dynamics equation in rotating motion

The dynamics of a body in rotating motion is expressed by the fundamental equation:

$$J\frac{\partial^2\theta}{\partial t^2} = \Sigma\vec{\Gamma}_{ext} \quad \Rightarrow \quad J\,\ddot{\theta} = \Gamma em - \Gamma r$$

where:

- J is the moment of inertia of the assembly in rotating motion
- θ is the angular position
- $\ddot{\theta}$ is the angular acceleration
- Γr is the resistant mechanical torque
- Γ_{em} is the electromagnetic torque

Solving principle

The **magneto-mechanical coupling** is a weak coupling between electromagnetic and kinematic aspects of a problem. A four-stage procedure is applied to study such problem. At each time step, the electromagnetic aspect is analyzed first and then the kinematic one.

The algorithm of this method is summarized below.

Stage	Description
1	Solve the Maxwell's equations and compute the electromagnetic torque acting on the movable part for a given relative position between the movable and the fixed parts of the device.
2	Solve the dynamics equation of the movable part, compute the acceleration and speed of the movable part during a time step and compute the new position of the movable part for the next time step.
3	Locate the movable part to the new position and re-mesh the computation domain of the electromagnetic field.
4	Return to step 1 for the next computation (next time step).

Additional notes

The electromagnetic force and torque acting on the movable part are computed by the virtual work method.

The mechanical force or torque acting on the movable part is an input data of the problem, entered by the user.

1.3.3. Sliding surface of the moving part, mesh connection, mechanical sets

Sliding surface of moving part and mesh connection

When we deal with rotating motion between a moving and a fixed part of the studied device, where the moving part "slides" with respect to the fixed part, it is not necessary to rebuild the mesh of the magnetic field computation domain at each time step. The only requirement is to **connect the mesh** of the two parts to the **sliding surface**. The Flux technique of "mesh connection" on both sides of a sliding surface consists of an interpolation of the nodal values of the surface elements from one side to the other.

Sliding surface

A **sliding surface** is a surface interposed between the volumes belonging to two **mechanical sets** that slide with respect to each other. To allow the moving part to slide with respect to the fixed one, a **separation** of the **geometry objects** (points, lines and faces) and the **mesh objects** (nodes, line elements and surface elements) is done at the level of the sliding surface.

Mechanical sets

A **mechanical set** is a set of regions and coils that have the same **displacement characteristics** (fixed or mobile).

2. Construction of the Flux project

Introduction

This chapter contains the **geometry description, mesh generation** and **physical description** of the **transducer**.
The user must have a good understanding of all functionalities of the Flux preprocessor.

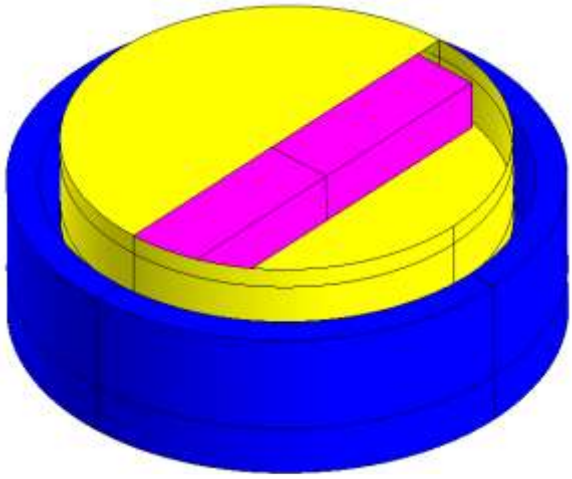

Project name

The Flux project is **GEO_MESH_PHYS.FLU**.

Contents

This chapter contains the following topics:

2.1. Geometry description process

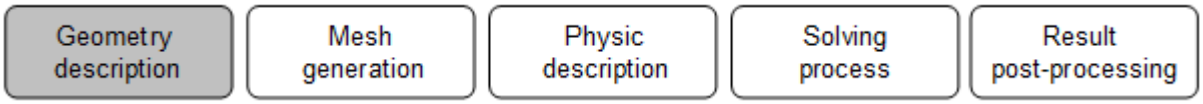

Introduction

This section presents the general steps of the geometry construction and the data required to describe the transducer.
The device is presented in the figure below.

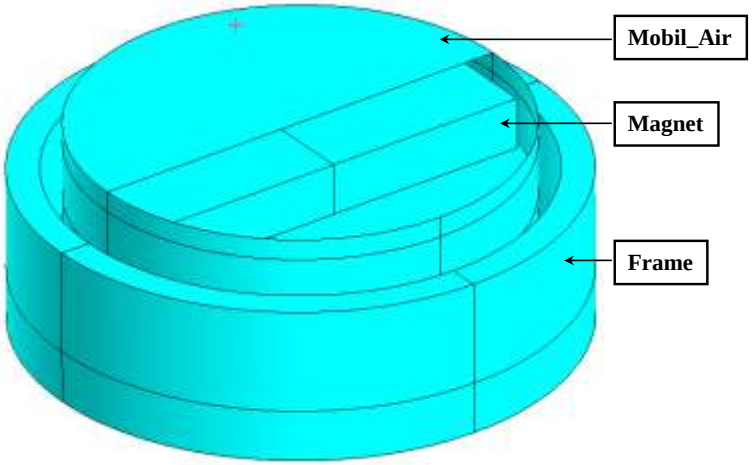

Contents

This section contains the following topics:

2.1.1. Create geometric tools

Goal

Three kind of geometric tools exist:
- the geometric parameters
- the coordinate systems
- the geometric transformations

They are very useful at different stages of the problem description (physics, solving …). In our study, these entities are used in order to:
- simplify the geometric building of the transducer
- modify the radius of the frame during the CASE 1 solving description

Data (1)

The characteristics of the geometric parameters are presented below.

Geometric parameter		
Name	**Comment**	**Expression**
X_MAG	Magnet half width	5
Y_MAG	Magnet half length	20
Z_MAG	Magnet half height	2.5
RADIUS	Frame external radius	26
THICKNESS	Frame thickness	3
DEPTH	Height of the upper tubular part of the frame	10
BOTTOM	Height of the bottom part	5

☞ **Geometry → Geometric parameter → New**

Outline (1)

The geometric parameters are shown in the figure below.

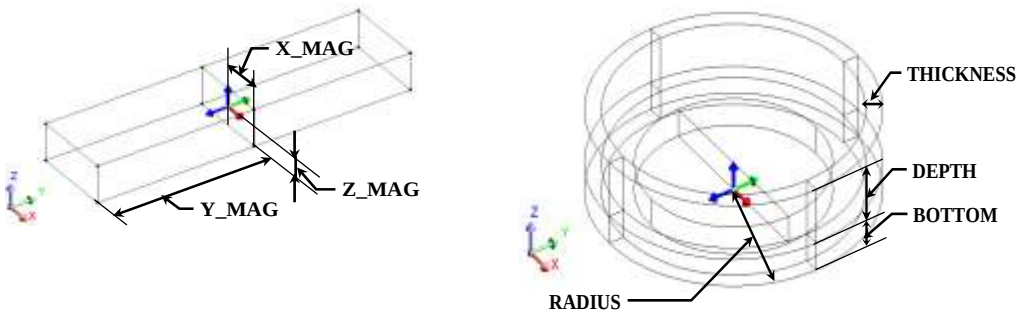

Continued on next page

Data (2) The characteristics of the coordinate systems are presented below.

Cartesian coordinate system defined with respect to the **Global** coordinate system								
Name	**Comment**	**Units**	**Origin coordinates**			**Rotation angle**		
			First (X)	**Second (Y)**	**Third (Z)**	**About X-axis**	**About Y-axis**	**About Z-axis**
MOBILE	Moving part	millimeter / degree	0	0	2*Z_MAG	0	0	0
FIXED	Fixed part	millimeter / degree	0	0	-DEPTH	0	0	0

Cartesian coordinate system defined with respect to the **Local** coordinate system								
Name	**Comment**	**Parent coord. system**	**Origin coordinates**			**Rotation angle**		
			First (X)	**Second (Y)**	**Third (Z)**	**About X-axis**	**About Y-axis**	**About Z-axis**
COIL_A	First coil	MOBILE	0	0	0	0	-90	0
COIL_B	Second coil	COIL_A	0	0	0	-90	0	0

☞ Geometry → Coordinate system → New 

Outline (2) The coordinate systems are shown in the figure below.

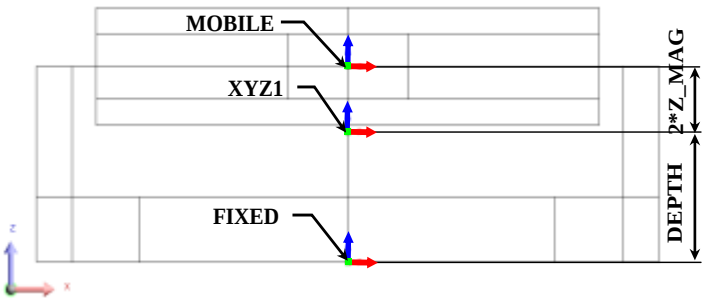

Note: Both local coordinate systems are located on the same origin as the MOBILE coordinate system but with different orientation.

Continued on next page

Data (3) The characteristics of the transformations are presented in the table below.

Translation vector					
Name	**Comment**	**Coord. system**	**Translation vector**		
			DX	**DY**	**DZ**
TRX_MAGNET	Translation to build the magnet width	MOBILE	2*X_MAG	0	0
TRY_MAGNET	Translation to build the magnet length	MOBILE	0	Y_MAG	0
TRZ_MAGNET	Translation to build the magnet height	MOBILE	0	0	2*Z_MAG
TRZ_AIRGAP	Translation to build the 2 air gap of the magnet	MOBILE	0	0	2
TRZ_BOTTOM	Translation to build the frame bottom	FIXED	0	0	BOTTOM
TRZ_DEPTH	Translation to build the upper tubular part of the frame	FIXED	0	0	DEPTH

Rotation defined by **angles** and **pivot point** coordinates								
Name	**Comment**	**Coord. system**	**Pivot point coordinates**			**Rotation angle**		
			1st (X)	**2nd (Y)**	**3rd (Z)**	**About X-axis**	**About Y-axis**	**About Z-axis**
ROTZ_AIRMAG	Rotation to build the air volume surrounding the magnet	MOBILE	0	0	0	0	0	90
ROTZ_FRAME	Rotation to build the frame circumference	FIXED	0	0	0	0	0	90

☞ **Geometry → Transformation → New** 

2.1.2. Create points and lines of the permanent magnet

Goal

The aim is to start the building of the magnet using geometric tools such as geometric parameters, coordinate systems and transformations.

Data (1)

The characteristics of the points are presented in the tables below.

Point defined by its **parametric coordinates**				
Number	**Coordinate system**	**Local coordinates**		
		First (X)	**Second (Y)**	**Third (Z)**
1	MOBILE	–X_MAG	–Y_MAG	–Z_MAG

Point defined by **propagation** of **another point**		
Number	**Transformation**	**Origin point**
2	TRX_MAGNET	1

☞ **Geometry → Point → New** 

Data (2)

The characteristics of the line are presented in the table below.

Segment defined by **starting** and **ending points**		
Number	**Starting point**	**Ending point**
1	1	2

☞ **Geometry → Line → New** 

Continued on next page

Data (3) The characteristics of the transformation are presented in the table below.

Face created with command **Extrude lines**					
Number	**Reference line**	**Transformation**	**Number of times**	**Extrusion type**	**Building options**
1	1	TRZ_MAGNET	1	Standard	Add faces, lines and points

☞ **Geometry → Line → Extrude lines**

Outline The result of the extrusion is shown in the figure below.

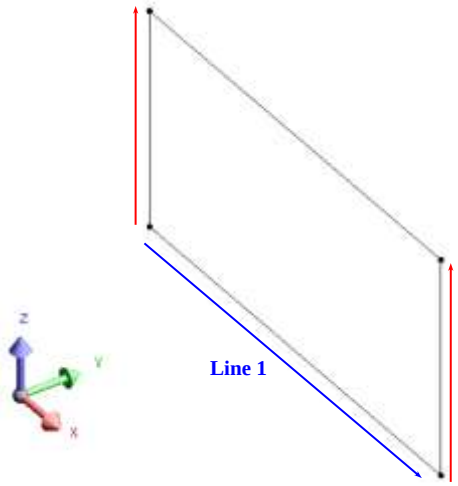

2.1.3. Build faces and volumes of the permanent magnet

Goal The goal is to finish the magnet building faces and volumes with extrusion.

Action Build faces automatically.

☞ **Geometry → Face → Build Faces**

Data The characteristics of the transformation are presented in the table below.

Face created with command **Extrude faces**					
Number	**Reference face**	**Transformation**	**Number of times**	**Extrusion type**	**Building options**
2 – 11	1	TRY_MAGNET	2	Standard	Add volumes, faces, lines and points

☞ **Geometry → Face → Extrude faces**

Outline The result of the extrusion is shown in the figure below.

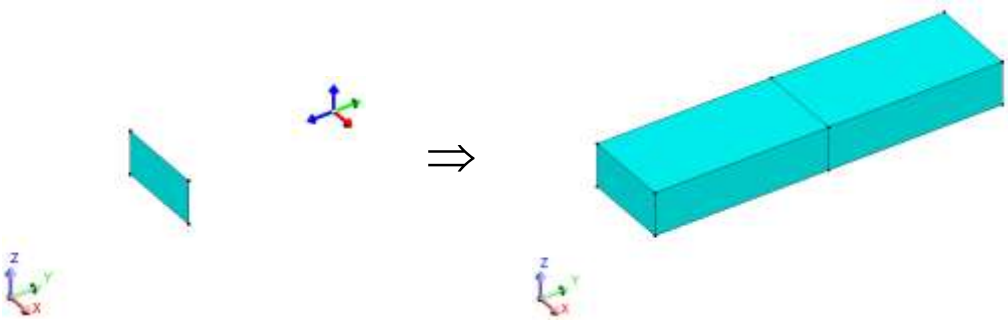

2.1.4. Create points and lines of the mobile air volume

Goal

The aim is to start the building of the mobile air using geometric tools such as geometric parameters, coordinate systems and transformations.

Data (1)

The characteristics of the point are presented in the table below.

Points defined by its **parametric coordinates**				
Number	**Coordinate system**	**Local coordinates**		
		First (X)	**Second (Y)**	**Third (Z)**
13	MOBILE	Y_MAG + 1	0	– Z_MAG – 2

☞ **Geometry → Point → New**

Data (2)

The characteristics of the transformation are presented in the table below.

Line created with command **Extrude points**				
Number	**Origin point**	**Transformation**	**Number of times**	**Extrusion type**
21, 22, 23, 24	13	ROTZ_AIRMAG	4	Standard

☞ **Geometry → Point → Extrude points**

Outline (1)

The result of the extrusion is shown in the figure below.

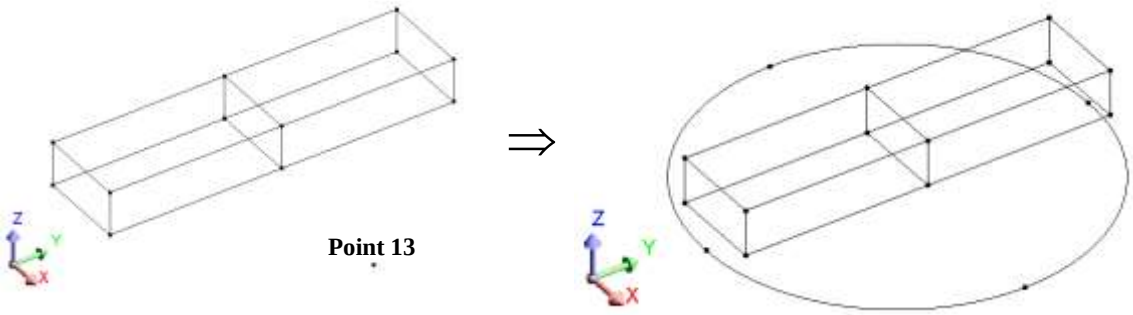

Continued on next page

Data (3) The characteristics of the transformations are presented in the table below.

Line created with command **Extrude lines**					
Number	**Reference line**	**Transformation**	**Number of times**	**Extrusion type**	**Building options**
25 – 32	21, 22, 23, 24	TRZ_AIRGAP	1	Standard	Add only lines and points
33 – 40	27, 29, 31, 32	TRZ_MAGNET	1	Standard	Add only lines and points
41 – 48	35, 37, 39, 40	TRZ_AIRGAP	1	Standard	Add only lines and points

☞ **Geometry → Line → Extrude lines** 

Outline (2) The results of extrusions are shown in the figure below.

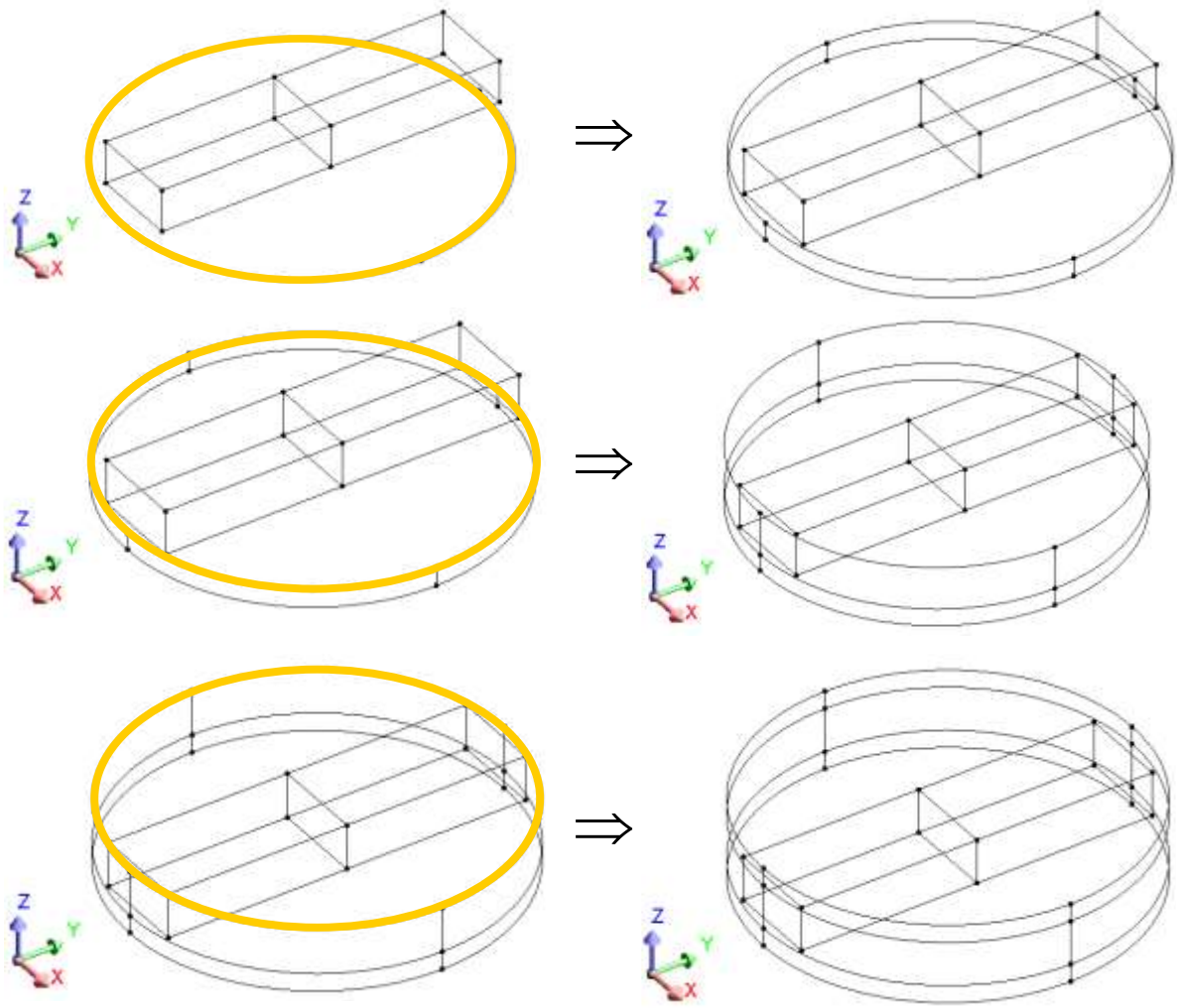

2.1.5. Build faces and volumes of the mobile air volume

Goal

The goal is to finish the magnet building faces and volumes automatically with the algorithm of automatic construction.

Action

Build faces and volumes automatically.

☞ **Geometry → Face → Build Faces**

☞ **Geometry → Volume → Build Volumes**

Outline

The faces of the mobile part are shown in the figure below.

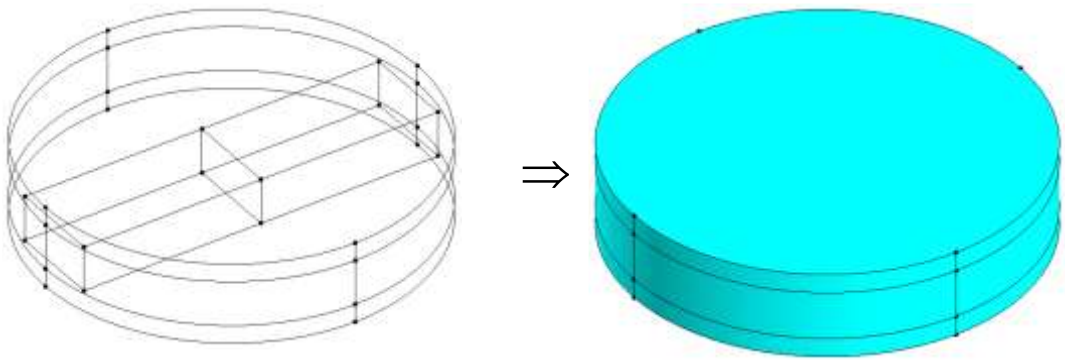

2.1.6. Create points and lines of the frame

Goal

The aim is to start the building of the frame using geometric tools such as geometric parameters, coordinate systems and transformations.

Data (1)

The characteristics of the points are presented in the table below.

Point defined by its **parametric coordinates**				
Number	**Coordinate system**	**Local coordinates**		
		First (X)	**Second (Y)**	**Third (Z)**
29	FIXED	RADIUS	0	0
30	FIXED	RADIUS – THICKNESS	0	0
31	FIXED	(2/3)*RADIUS	0	0

☞ **Geometry → Point → New** 

Data (2)

The characteristics of the line are presented in the table below.

Segment defined by **starting** and **ending points**		
Number	**Starting point**	**Ending point**
49	29	30

☞ **Geometry → Line → New** 

Data (3)

The characteristics of the transformation are presented in the table below.

Line created with command **Extrude lines**					
Number	**Reference line**	**Transformation**	**Number of times**	**Extrusion type**	**Building options**
50 – 60	49	ROTZ_FRAME	4	Standard	Add only lines and points

☞ **Geometry → Line → Extrude lines** 

Continued on next page

Outline (1) The result of the extrusion is shown in the figure below.

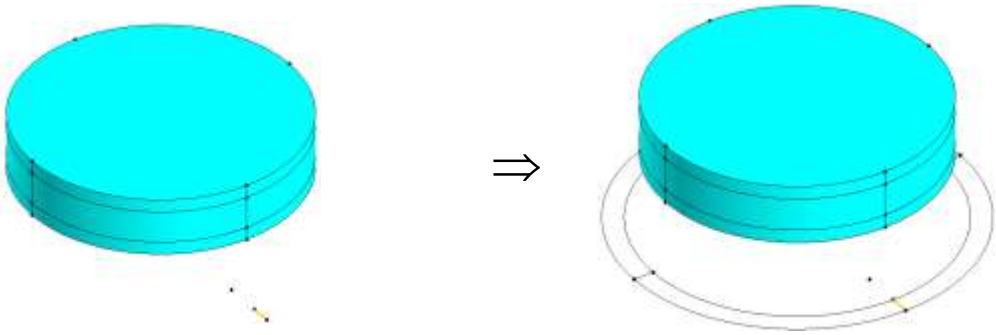

Data (4) The characteristics of the transformation are presented in the table below.

Line created with command **Extrude points**				
Number	**Origin point**	**Transformation**	**Number of times**	**Extrusion type**
61 – 64	31	ROTZ_FRAME	4	Standard

☞ **Geometry → Point → Extrude points** 

Outline (2) The result of the extrusion is shown in the figure below.

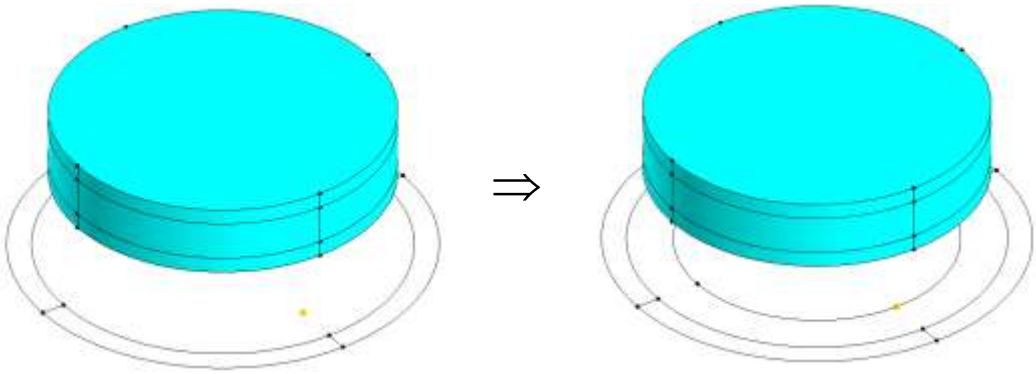

2.1.7. Build faces and volumes of the frame

Goal The goal is to finish the frame building faces and volumes with extrusions.

Action Build faces automatically.

☞ **Geometry → Face → Build Faces**

Data The characteristics of the transformations are presented in the table below.

Face created with command **Extrude faces**					
Number	**Reference face**	**Transformation**	**Number of times**	**Extrusion type**	**Building options**
34 – 55	28, 29, 30, 31, 32, 33	TRZ_BOTTOM	1	Standard	Add volumes, faces, lines and points
56 – 71	38, 42, 52, 54	TRZ_DEPTH	1	Standard	Add volumes, faces, lines and points

☞ **Geometry → Face → Extrude faces**

Outline The results of extrusions are shown in the figure below.

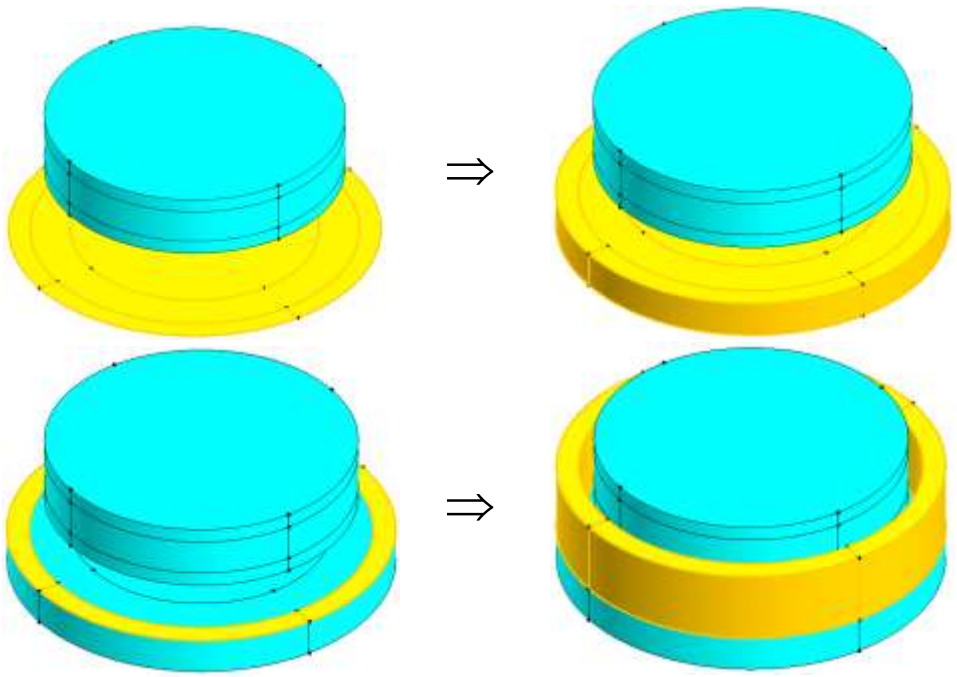

2.1.8. Add an infinite box to the domain

Goal

In order to automatically impose the natural condition of a zero magnetic field at infinity, the studied device is placed inside an infinite box. Then the faces and volumes of the whole geometry are built using the algorithm of automatic construction.

Data (1)

The characteristics of the infinite box are presented in the table below.

Infinite box of **Z Cylinder** type				
Name (automatic)	**Inner Radius**	**Outer Radius**	**Inner Size, Half Height**	**Outer size, Half Height**
InfiniteBoxCube	60	90	30	60

☞ **Geometry → Infinite box → New** 

Outline (1)

The infinite box is presented in the figure below.

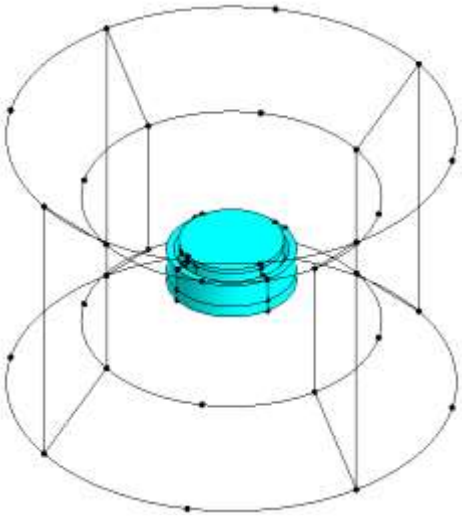

Continued on next page

Data (2) The characteristics of the command are presented in the table below.

Complete Infinite box		
Building options	**Coordinates system**	**Periodicity options**
Add Volumes, Faces, Lines and Points	XYZ1	No link mesh associated

☞ **Geometry → Infinite box → Complete Infinite box**

Outline (2) The infinite box with faces and volumes is presented in the figure below.

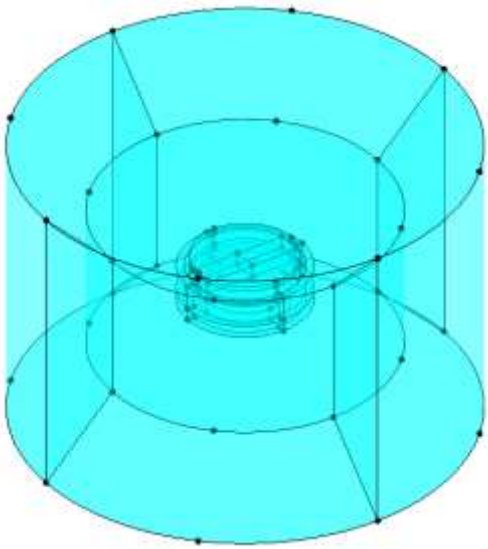

2.2. Mesh generation process

Geometry description	Mesh generation	Physic description	Solving process	Result post-processing

Introduction

This section presents the general steps of mesh generation for the computational domain and the data required to describe the transducer mesh. The meshed device is presented in the figure below.

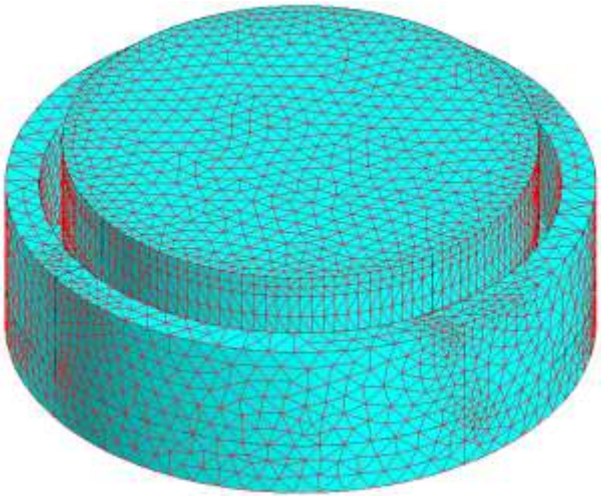

Contents

This section contains the following topics:

2.2.1. Mesh the device

Goal

Mesh generation process is an essential step of the Finite Element method. At this stage, the computational domain is divided in small elements.
Each node of the mesh constitute a support where the **state variable** approximation (such as scalar or vector potentials, temperature, etc.) and the **derived fields** (such as magnetic field and induction, magnetic flux density, electric field, thermal flux density, etc.) are computed.
Aided mesh is activated by default in Flux. Such tool permits to obtain a first basic mesh with global settings.

Action

Mesh the device.

☞ **Mesh → Mesh domain** 

Outline

The result is presented in the figure below.

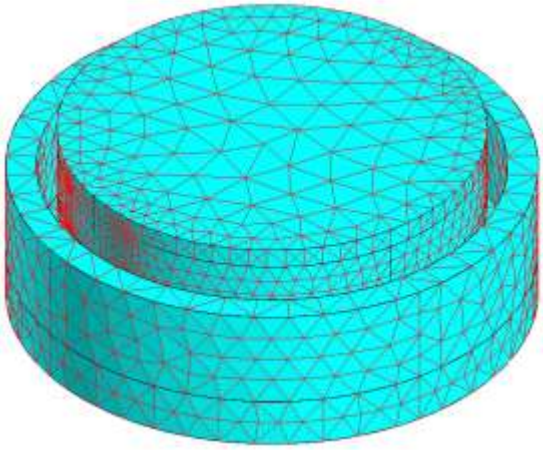

Comments

To optimize the accuracy of the results, it is advised to have a mesh:
- with well proportioned mesh elements (close to equilateral triangle)
- with an Infinite box of at least 2 elements large
- taking into account the physics (the mesh must be denser in the areas with important field variation)

For instance, the solution to improve the mesh here is to:
- assign the mapped mesh generator
- modify the aided mesh
- create and assign local mesh points
- create and assign local a mesh line

2.2.2. Assign the mapped mesh generator

Goal

The predefined mapped mesh generator is assigned to the cylindrical faces of the mobile air volume in order to improve the accuracy of the rotating motion calculus.

Action

Assign the mapped mesh generator to the cylindrical faces of the mobile air. The involved faces are the faces no 15 to 26.

☞	**Mesh → Assign mesh information → Assign mesh point / line / generator → Assign mesh generator to faces**	

Outline

The faces assigned are presented in the figure below.

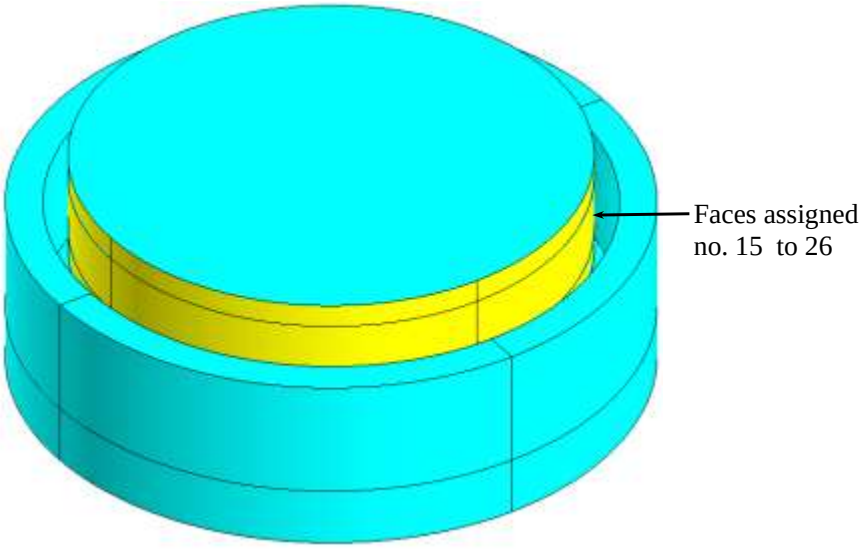

2.2.3. Modify the aided mesh

Goal

The aided mesh is modified in order to refine easily the whole mesh of the device.

Data

The modified characteristics of the aided mesh are presented in the table below.

Aided Mesh						
Deviation			**Relaxation**			**Shadow**
Lines / Faces	**Type**	**Value**	**Lines**	**Faces**	**Volumes**	**Faces**
Assign – Excluded Infinite Box	Relative	0.9	Low	Low	Low	High

☞ **Mesh → Aided mesh → Edit** 

2.2.4. Create and assign the mesh points

Goal

Mesh points enable the user to add some local mesh information in order to control the mesh in specific areas. In this case, OUT_BOX and IN_BOX meshpoints allows obtaining an infinite box with roughly 4 elements large.

Data

The characteristics of the mesh point are presented in the table below.

Mesh point				
Name	**Comment**	**Unit**	**Value**	**Color**
OUTBOX	Discretization on the exterior points of the infinite box	millimeter	20	Turquoise
INBOX	Discretization on the interior points of the infinite box	millimeter	10	Red

☞ **Mesh →Mesh point → New** 

Action

Assign mesh points to points.

☞ **Mesh → Assign mesh information → Assign mesh point / line / generator → Assign mesh point to points** 

Outline

The assignment of the mesh points to points is presented in the figure below.

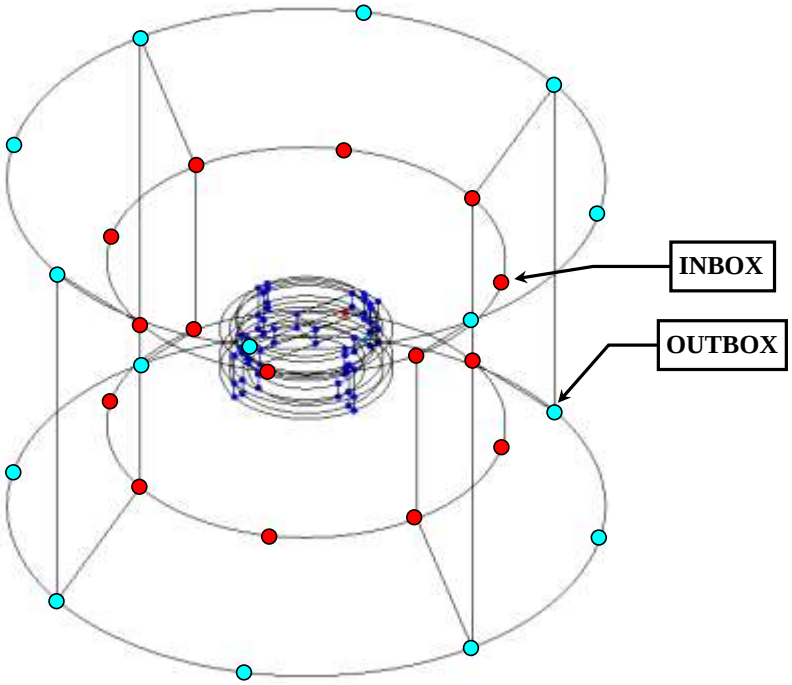

2.2.5. Create and assign the mesh line

Goal

As mesh line sets the density of nodes on a line, it can be useful to control the distribution of nodes on the lines assigned.
In our case, it is interesting to make denser the lines surrounding the mobile air.

Data

The characteristics of the mesh line are presented in the table below.

Mesh Line				
Name	**Comment**	**Definition**		**Color**
		Type	**Number**	
CIRC_EXT_ MOBILE	Discretization on circular lines of the mobile part	Relative deviation	0.98	Magenta

☞ **Mesh → Mesh line → New** 

Action

Assign the mesh line to lines. The involved lines are the lines no 15 to 26.

☞ **Mesh → Assign mesh information → Assign mesh point / line / generator → Assign mesh line to points** 

Outline

The assignment of the mesh line to lines is presented in the figure below.

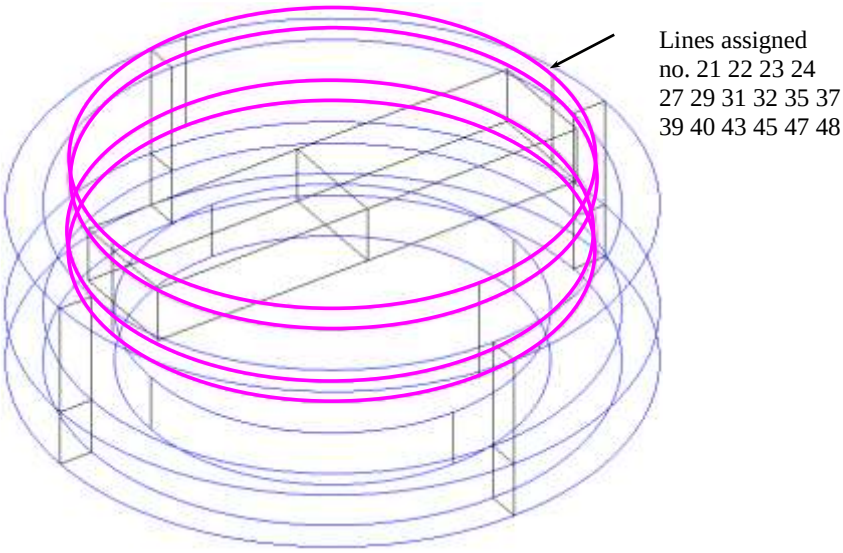

2.2.6. Generate the mesh

Goal

As the first mesh obtained is too coarse, a second mesh is generated using the aided mesh and local settings, such as meshpoints and meshlines.
Lines, faces and volumes of the computational domain are meshed using the algorithm of both automatic and mapped mesh generators. Then the second order elements are generated.

Action (1)

Mesh faces.

☞ **Mesh → Mesh faces**

Action (2)

Mesh volumes.

☞ **Mesh → Mesh volumes**

Note: another solution is to select the command “Mesh domain”.

Outline

The mesh of the study domain and the detail of the mesh in the device zone are presented in the figure below.

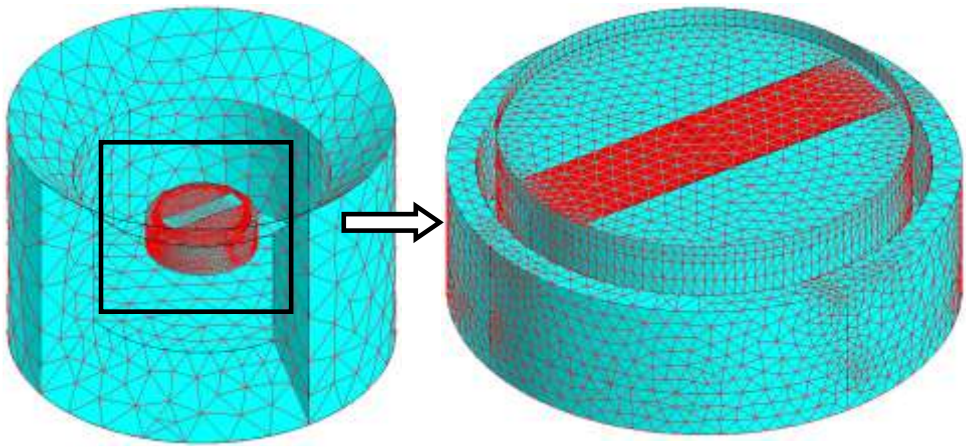

Continued on next page

Action (3) Generate second order mesh elements

☞ **Mesh → Generate second order elements**

Details of the resulting mesh of the transducer are presented below.

```
Volume elements :
   Number of elements not evaluated     : 0  %
   Number of excellent quality elements : 35.8  %
   Number of good quality elements      : 48.22  %
   Number of average quality elements   : 14.94  %
   Number of poor quality elements      : 1.03  %

Number of nodes : 95880
Number of line elements : 1780
Number of surface elements : 22081
Number of volume elements : 70635
Mesh order : 2nd order
```

2.3. Physical description process

Geometry description	Mesh generation	Physic description	Solving process	Result post-processing

Introduction

This section presents the definition of the physical application and physical properties – materials, regions, and coils.

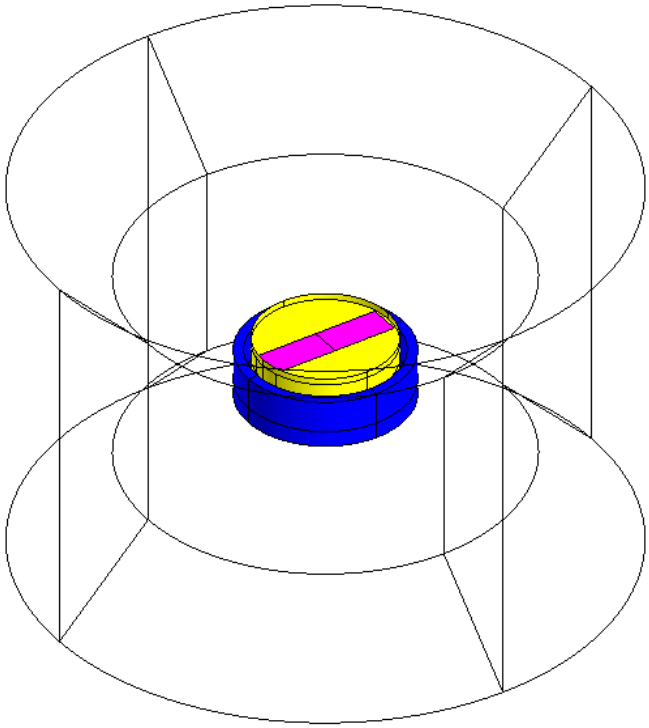

Contents

This section contains the following topics:

2.3.1. Define the physical application

Goal

First, the physical application is defined in order to solve the studied device. The required physical application is the Magneto Static 3D application.

Data

The characteristics of the application are presented in the table below.

Magneto Static 3D application			
Formulation model			Coils coefficient
Formulation model	Order of finite element functions for scalar potential	Order of finite element functions for vector potential	
Automatic formulations	Automatic	Automatic	Automatic coefficient

☞ **Application → Define → Magnetic → Magneto Static 3D**

2.3.2. Create materials

Goal

The first step to model the physical properties of the device is to create the "material" entities.
In this study, two materials are created for the physical description of the transducer:

- the first material is defined for the permanent magnet; this material is magnetized along its longitudinal axis, the Y-axis of the MOBILE coordinate system; it is homogeneous and isotropic
- the second material is defined for the metallic frame; this material is characterized by a nonlinear B(H) curve

Data

The characteristics of the materials are presented in the tables below.

B(H) magnetic property**: linear magnet** described by **Cartesian vector B_r**							
Name	**Comment**	**Remanent flux density B_r (T)**			**Relative permeability μ_r**		
		X-axis	**Y-axis**	**Z-axis**	**X-axis**	**Y-axis**	**Z-axis**
SMCO	Permanent magnet	0	0.65	0	1.15	1.15	1.15

B(H) magnetic property**: isotropic analytic saturation + knee adjustment**				
Name	**Comment**	**Initial relative permeability**	**Saturation magnetization (T)**	**Knee adjustment coefficient**
STEEL	Metallic frame	4000	1.75	0.4

☞ **Physics → Material → New**

2.3.3. Create volume regions

Goal

The second step to model the physical properties of the device is to create volume regions. They enable the user to group some entities that have the same physical properties.
Five volume regions are necessary for the physical description of the transducer:

- the INFINITE region corresponding to the air of the infinite box
- the FIXED AIR region corresponding to the air surrounding the frame and the mobile part
- the MOBILE AIR region corresponding to the air surrounding the magnet
- the FRAME region corresponding to the frame
- the MAGNET region corresponding to the magnet

Data

The characteristics of the volume regions are presented in the table below.

Volume region				
Name	**Comment**	**Type**	**Material**	**Color**
INFINITE	Air volumes in the infinite box	Air or vacuum region	-	Turquoise
FIXED_AIR	Air volumes in contact with the frame	Air or vacuum region	-	Turquoise
MOBILE_AIR	Air volumes in contact with the permanent magnet	Air or vacuum region	-	Yellow
FRAME	Frame volumes	Magnetic non-conducting region	STEEL	Cyan
MAGNET	Permanent magnet volumes	Magnetic non-conducting region	SMCO	Magenta

☞ **Physics → Volume region → New** 

2.3.4. Assign volume regions to volumes

Goal

The third and final step to model the physical properties of the device is to assign volume regions to volumes. The assignment operation enables the user to “link” the physical properties with the geometrical entities

Action (1)

Assign volume regions to volumes.

☞ **Physics → Assign regions to geometric entities → Assign regions to volumes (completion mode)**

Outline

The region assignment is presented in the figure below.

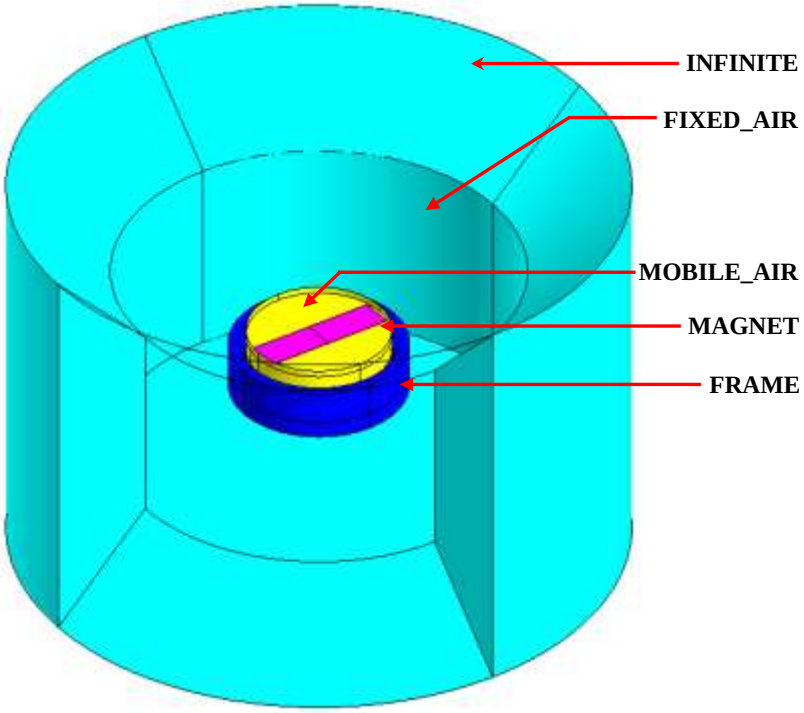

Action (2)

Orient the SMCO material for the MAGNET region in the MOBILE coordinate system.

☞ **Physics → Material → Orient material for volume region**

2.3.5. Create sources (electric components and coils)

Goal

Two non-meshed coils with two associated electric components (of coil conductor type) are created to model two current sources of the transducer.

Data (1)

The characteristics of the coil conductors are presented in the table below.

Stranded coil with **imposed current** (A)		
Name	**Comment**	**Value**
COILCONDUCTOR_A	Current source for the first coil	0.06
COILCONDUCTOR_B	Current source for the second coil	0.06

☞ **Physics → Electrical components → Stranded coil conductor → New**

Data (2)

The characteristics of the non-meshed coils are presented below.

Rectangular coil: geometric definition								
Coil						**Coil section**		
Number	**Coord. system**	**Center**	**Dimension**		**Filet radius**	**Type**	**Height**	**Width**
			Ox	**Oy**				
1	COIL_A	0, 0, 0	2*Z_MAG+7	44	2	Rectangle	2	1
2	COIL_B	0, 0, 0	2*Z_MAG+7	44	2	Rectangle	2	1

Rectangular coil: electrical definition			
Electric component associated with the coil	**Number of turns**	**Conductors in series or in parallel**	**Symmetries and periodicities**
COILCONDUCTOR_A	1000	… in series	duplication
COILCONDUCTOR_B	1000	… in series	duplication

☞ **Physics → Non meshed coil → New**

Outline

The non-meshed coils are presented in the figure below.

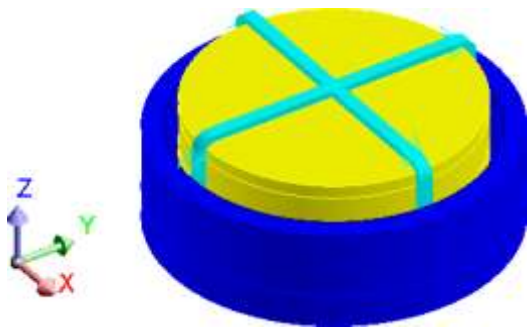

3. Case 1: multi-parameter study

Case 1

The first case is a multi-parameter study.

In the first case, a magneto static analysis of the transducer is performed. The movable part is immobilized to a specified angular position. Two parameters are studied:

- the current through the coils, which varies from 0.02 A to 0.1 A with a step of 0.02 A
- the frame radius, which varies from 26 mm to 28 mm with a step of 0.5 mm

Starting Flux project

The starting project is the Flux project **GEO_MESH_PHYS.FLU**.
This project contains:

- the geometry description of the transducer
- the mesh of the computational domain
- the initial physical description of the transducer

New Flux project

The new Flux project is saved under the name **CASE1.FLU**.

Contents

This chapter contains the following topics:

3.1. Case 1: physical description

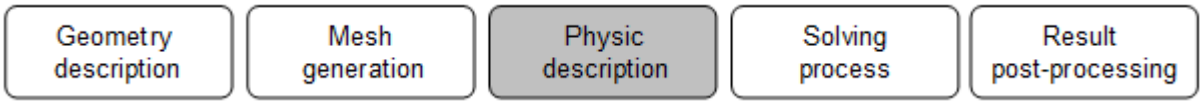

Introduction

This section explains how to modify the initial physical description.

Contents

This section contains the following topics:

3.1.1. Create I/O parameters

Goal

One physical In/Out parameter is created in order to vary the supply current of the two coils.

Data

The characteristics of the I/O parameter are presented in the table below.

I/O parameter controlled *via* a **scenario**		
Name	**Comment**	**Reference value**
CURRENT	Value of the supply current of the two coils	0.06 A

☞ **Parameter/Quantity → I/O Parameter → New**

3.1.2. Modify the physical properties

Data

The modified characteristics of the coil conductors are presented in the table below.

Stranded coil with **imposed current** (A)		
Name	**Comment**	**Value**
COILCONDUCTOR_A	Current source for the first coil	**CURRENT**
COILCONDUCTOR_B	Current source for the second coil	**CURRENT**

3.2. Case 1: solving process

Geometry description	Mesh generation	Physic description	Solving process	Result post-processing

Introduction

This section explains how to prepare and solve case 1.

Data

The characteristics of the solving scenario are presented in the tables below.

Solving scenario		
Name	**Comment**	**Type**
CASE1	Multi-parameter study	Multi-values

Solving scenario				
Parameter control				
Controlled parameter	**Interval**			
	Lower limit	**Higher limit**	**Method**	**Values**
CURRENT	0.02	0.1	List of steps	0.04
				0.06
				0.08
RADIUS	26.0	28.0	List of steps	26.5
				27.0
				27.5

☞ **Solving → Solving scenario → New**

☞ **Solving → Solve**

Note : the geometric parameter RADIUS has been created during the geometric construction of the project and it can be used to a parametric study

3.3. Case 1: results post-processing

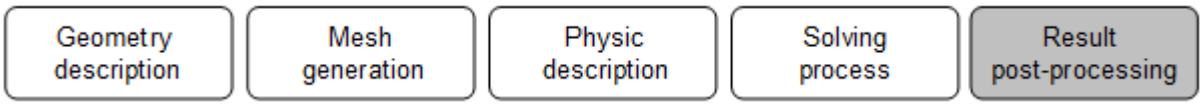

Introduction

This section explains how to analyze the principal results of case 1.

Contents

This section contains the following topics:

3.3.1. Plot 2D curves of the electromagnetic torque versus I/O parameters

Goal

The trends of the electromagnetic torque versus different parameters are computed in order to evaluate the impact of those parameters. But before to compute the electromagnetic torque, the pivot point has to be specified.

Data (1)

The characteristics of the pivot point are presented in the table below.

Edit Axis pivot point				
Direction	**Coordinate system**	**Coordinates**		
		1st	**2nd**	**3rd**
Parallel to Oz	MOBILE	0	0	0

☞ **Support → Torque_axis → Edit**

Data (2)

The characteristics of the electromagnetic torque versus the supply current are presented in the tables below.

2D curve (I/O parameter)					
Name	**Comment**	**Parameter**			
		Name	**Current value**	**Limit min**	**Limit max**
CURVE1	Electromagnetic torque versus current	RADIUS	26.0	-	-
		CURRENT	-	0.02	0.1

2D curve (I/O parameter)		
Formula on ordinate : Region		
Spatial group	**Quantity**	**Formula**
V_MAGNET	Torque / Magnetic / Moment [N.m]	TMag(V_MAGNET)

☞ **Curve → 2D Curve (I/O parameter) → New 2D Curve (I/O parameter)**

Continued on next page

Result (1)

The CURVE1 is displayed as presented in the figure below.

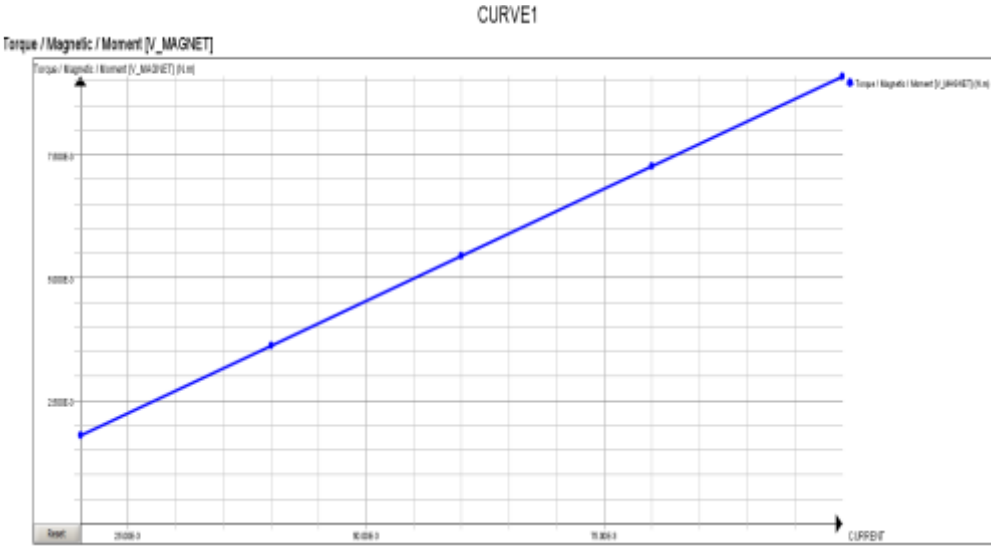

Data (3)

The characteristics of the electromagnetic torque versus the frame radius are presented in the tables below.

2D curve (I/O parameter)					
Name	**Comment**	**Parameter**			
		Name	**Current value**	**Limit min**	**Limit max**
CURVE2	Electromagnetic torque versus radius	RADIUS	-	26.0	28.0
		CURRENT	0.1	-	-

2D curve (I/O parameter)		
Formula on ordinate : Region		
Spatial group	**Quantity**	**Formula**
V_MAGNET	Torque / Magnetic / Moment [N.m]	TMag(V_MAGNET)

☞ **Curve → 2D Curve (I/O parameter) → New 2D Curve (I/O parameter)**

Continued on next page

Action

Change the appearance of the graphic:

- set “8.25E-3”for the displayed Y min value, in axis tab

Result (2)

The CURVE2 is displayed as presented in the figure below.

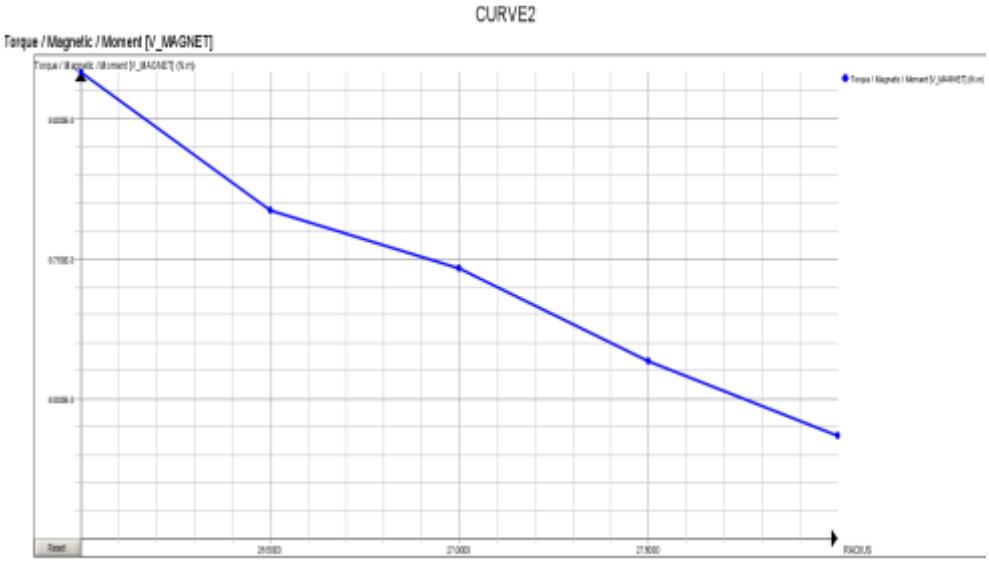

3.3.2. Plot a 2D curve of the magnetic field along a path

Goal

A 2D curve of the magnetic field along a path surrounding the magnet of the transducer is computed and displayed. Then the 2D curve is exported in a .TXT file to compare it with a result in the next section.

Data (1)

The characteristics* of the computation step are presented in the table below.

Scenario and **computation step selection**		
Scenario	**Computation step**	
	Parameter name	**Value**
CASE1	RADIUS	26.0
	CURRENT	0.06

* These characteristics are located in the dialog box below the data tree.

Data (2)

The characteristics of the path are presented in the table below.

Path defined by **2 points**				
Name	**Comment**	**Definition**	**Color**	**Region**
MAGNET_ PATH	Path surrounding the magnet	by coordinates	Black	MAGNET

Path defined by coordinates								
Path points								
Starting point				**Ending point**				**Sampling rate**
Coord. system	**Coordinates**			**Coord. system**	**Coordinates**			
	1st	**2nd**	**3rd**		**1st**	**2nd**	**3rd**	
XY1	0	-20	7.5	XY1	0	20	7.5	50
XY1	0	20	7.5	XY1	0	20	2.5	25
XY1	0	20	2.5	XY1	0	-20	2.5	50
XY1	0	-20	2.5	XY1	0	-20	7.5	25

☞ **Support → Path → New**

Outline

The MAGNET_PATH is presented in the figure below.

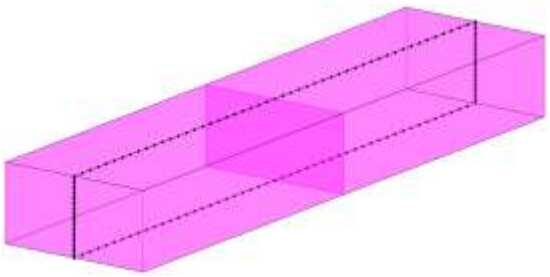

Continued on next page

Data (3)

The characteristics of the curve are presented in the table below.

2D curve (XYZ path)			
Name	**Path**	**Quantity**	**Formula**
MAG_FIELD_MAGNET	MAGNET_PATH	Magnetic field / Magnitude	ModV(H)

☞ **Curve → 2D curve (Path) → New 2D curve (Path)**

Action

Change the appearance of the graphic:

- set “line” for the curve style, in quantities tab

Result

The curve is displayed as presented in the figure below.

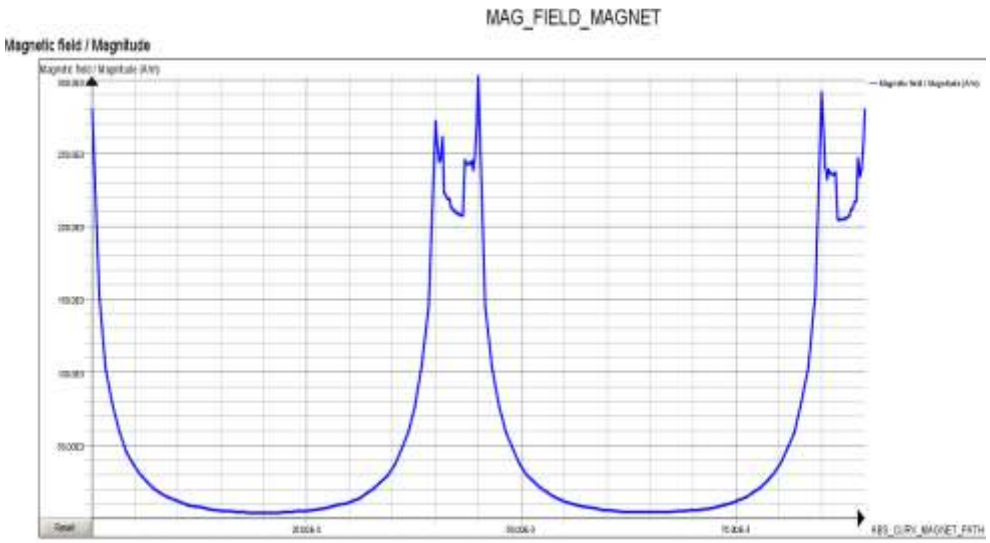

Data (4)

The characteristics of the exportation of the 2D curve are presented below.

TXT export	
Name	**Writing mode**
Magnet_Case1	Add values

☞ **Curve → 2D curve (path) → TXT export**

3.3.3. Plot a 3D curve of magnetic field along a path versus I/O parameter

Goal

The MAGNET_PATH is used to plot a 3D curve of the magnetic field variation along a path as function of the frame radius. Then the 3D curve is exported in a .XLS file.

Data (1)

The characteristics of the 3D curve are presented in the table below.

3D curve (Path + I/O parameter)							
Name	Path	Parameter				Quantity	Formula
		Name	Current value	Limit min.	Limit max.		
3D_CURVE_H	MAGNET_PATH	RADIUS	-	26.0	28.0	Magnetic field / Magnitude	ModV(H)
		CURRENT	0.1	-	-		

☞ **Curve → 3D Curve (Path + I/O parameter) → New 3D Curve (Path + I/O parameter)**

Result

The following figure shows the magnetic field variation as function of the frame radius along the MAGNET_PATH.

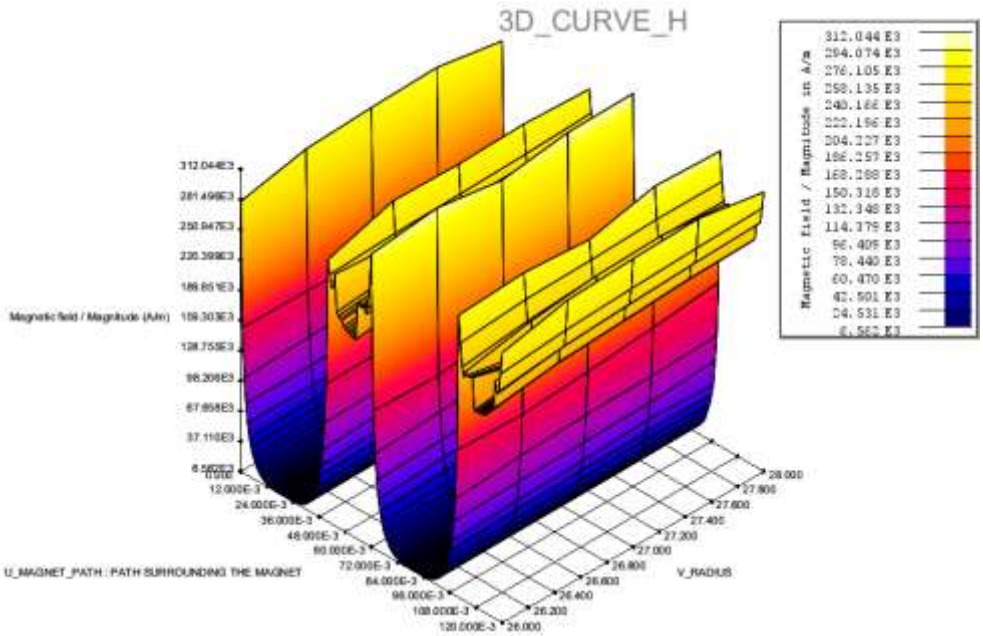

Continued on next page

Note: the results can also be displayed in a 2D representation

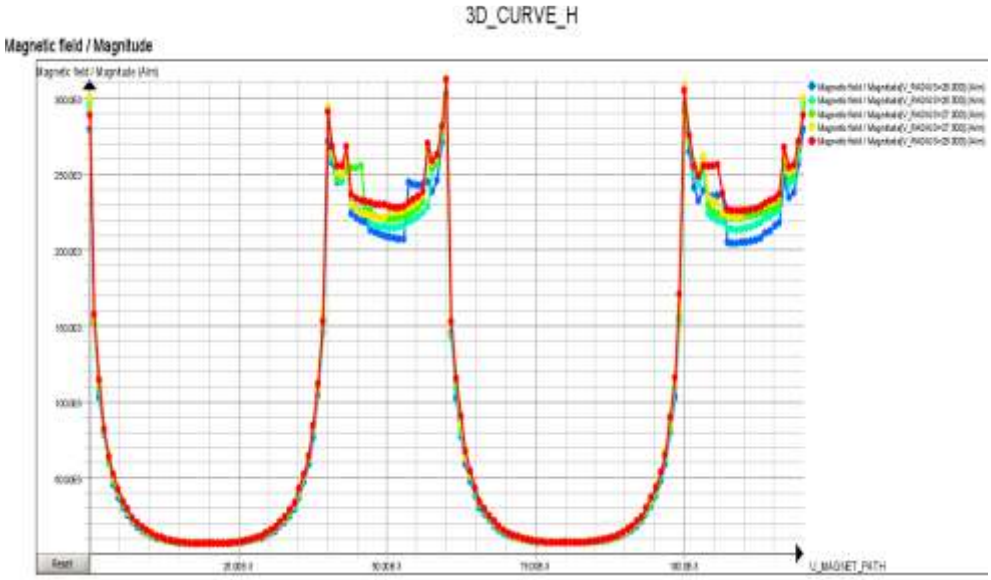

Data (2)

The characteristics of the exportation of the 2D curve are presented below.

Excel export	
Name	**Writing mode**
3D_CURVE_H	Add values

☞ **Curve → 3D Curve (Path + I/O Parameter) → Excel export**

4. Case 2: multi-static kinematic model

Case 2

The second case is a study using a multi-static kinematic model.

In the second case, a magneto static analysis of the transducer is performed. The movable part of the device takes different angular positions, from 0° to 90° with a step of 1°. The two coils are supplied with the same current of 0.06 A.

Starting Flux project

The starting project is the Flux project **GEO_MESH_PHYS.FLU**.
This project contains:

- the geometry description of the transducer
- the mesh of the computation domain
- the initial physical description of the transducer

New Flux project

The new Flux project is **CASE2.FLU**.

Contents

This chapter contains the following topics:

4.1. Case 2: physical description

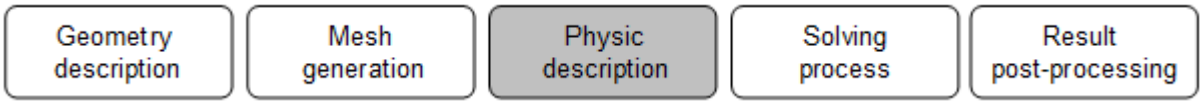

Introduction

This section explains how to prepare and solve case 2.

Contents

This section contains the following topics:

4.1.1. Create mechanical sets

Goal

Two mechanical sets are created to define kinematic properties of the transducer:

- one mechanical set for the fixed part of the transducer
- one mechanical set for the relative displacement of the moving part of the transducer

Data

The characteristics of the mechanical sets are presented in the table below.

Fixed mechanical set	
Name	**Comment**
FIXED	Fixed part

Mechanical set of rotation around one axis							
Name	**Comment**	**Rotation axis**	**Coord. system**	**Pivot point coordinates**			**Kinematics**
				1st	**2nd**	**3rd**	
MOBILE	Moving part	parallel to Z-axis	MOBILE	0	0	0	Multi-static

☞ **Physics → Mechanical set → New** 

4.1.2. Modify the physical properties

Goal

The physical properties are modified as follows:

- to define the relation between volume regions and mechanical sets,
  - the mobile volume regions are included in the mobile mechanical set
  - and the fixed volume regions are included in the fixed mechanical set
- to define the relation between coils and mechanical sets, the two coils of the transducer are included in the fixed mechanical set

Data (1)

The modified characteristics of volume regions are presented in the table below.

Volume region					
Name	**Comment**	**Type**	**Material**	**Color**	**Mechanical set**
FIXED_AIR	Air volumes in contact with the frame	Air or vacuum region	-	Turquoise	FIXED
FRAME	Frame volumes	Magnetic non-conducting region	STEEL	Cyan	FIXED
INFINITE	Air volumes in the infinite box	Air or vacuum region	-	Turquoise	FIXED
MAGNET	Permanent magnet volumes	Magnetic non-conducting region	SMCO	Magenta	MOBILE
MOBILE_AIR	Air volumes in contact with the permanent magnet	Air or vacuum region	-	Yellow	MOBILE

Data (2)

The modified characteristics of the coils are presented in the table below.

Rectangular coil: geometric definition					
Coil					
Number	**Coord. system**	**Center**	**Dimension**		**Filet radius**
			Along X	**Along Y**	
1	COIL_A	0, 0, 0	2*Z_MAG+7	44	2
2	COIL_B	0, 0, 0	2*Z_MAG+7	44	2

Rectangular coil: geometric definition			
Coil section			**Mechanical set**
Type	**Height**	**Width**	
Rectangle	2	1	**FIXED**
Rectangle	2	1	**FIXED**

4.2. Case 2: solving process

Geometry description	Mesh generation	Physic description	Solving process	Result post-processing

Introduction

This section explains how to prepare and solve case 2.

Data

The characteristics of the solving scenario are presented in the tables below.

Solving scenario		
Name	**Comment**	**Type**
CASE2	Multi-static kinematic model	Multi-values

Solving scenario				
Parameter control				
Controlled parameter	**Interval**			
	Lower limit	**Higher limit**	**Method**	**Step value**
ANGPOS_ MOBILE	0.0	90.0	Step value	1.0

☞ **Solving → Solving scenario → New**

☞ **Solving → Solve**

4.3. Case 2: results post-processing

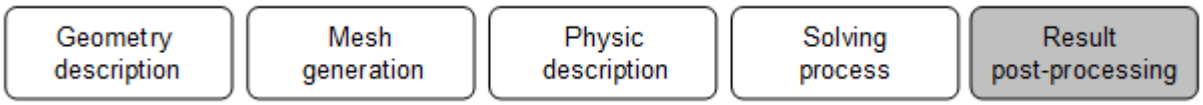

Introduction

This section explains how to analyze the principal results of case 2.

Contents

This section contains the following topics:

4.3.1. Display arrows of the magnetic flux density on volume regions

Goal

The display of graphic post processing enables the user to check if the problem is correctly formulated and emphasizes both the magnetic flux density concentration areas and the direction of the flux. It also enables the user to check the mesh quality.

Data (1)

The characteristics* of the computation step are presented in the table below.

Scenario and **computation step selection**		
Scenario	**Computation step**	
	Parameter name	**Value**
CASE2	ANGPOS_MOBILE	0°

* These characteristics are located in the dialog box below the data tree.

Data (2)

The characteristics of the arrows are presented in the table below

Arrows on **volume regions**			
Name	**Type of Support**	**Supports**	**Formula**
ARROWS1	Spatial group	V_FRAME V_MAGNET	B

☞ **Graphic → Arrows → New** 

Result

The arrows of the magnetic flux density are displayed below

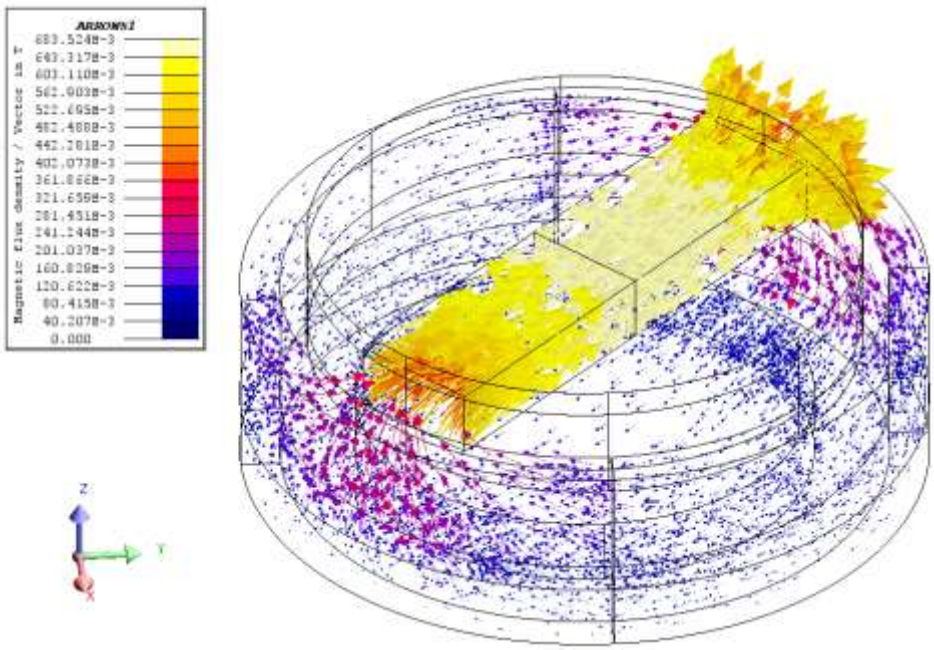

4.3.2. Plot a 2D curve of the electromagnetic torque versus magnet angular position

Goal

The trend of the electromagnetic torque versus magnet angular position is displayed in order to visualize the equilibrium position of the magnet.

Data (1)

The characteristics of the pivot point are presented in the table below.

Edit Axis pivot point				
Direction	**Coordinate system**	**Coordinates**		
		1st	**2nd**	**3rd**
Parallel to Oz	MOBILE	0	0	0

☞ **Support → Torque_axis → Edit**

Data (2)

The characteristics of the electromagnetic torque versus the angular position are presented in the tables below.

2D curve (I/O parameter)					
Name	**Comment**	**Parameter**			
		Name	**Current value**	**Limit min**	**Limit max**
CURVE1	Electromagnetic torque versus angular position	ANGPOS _MOBILE	-	0	90

2D curve (I/O parameter)		
Formula on ordinate : Region		
Spatial group	**Quantity**	**Formula**
V_MAGNET	Torque / Magnetic / Moment [N.m]	TMag(V_MAGNET)

☞ **Curve → 2D Curve (I/O parameter) → New 2D Curve (I/O parameter)**

Continued on next page

Result

The CURVE1 is displayed as presented in the figure below.

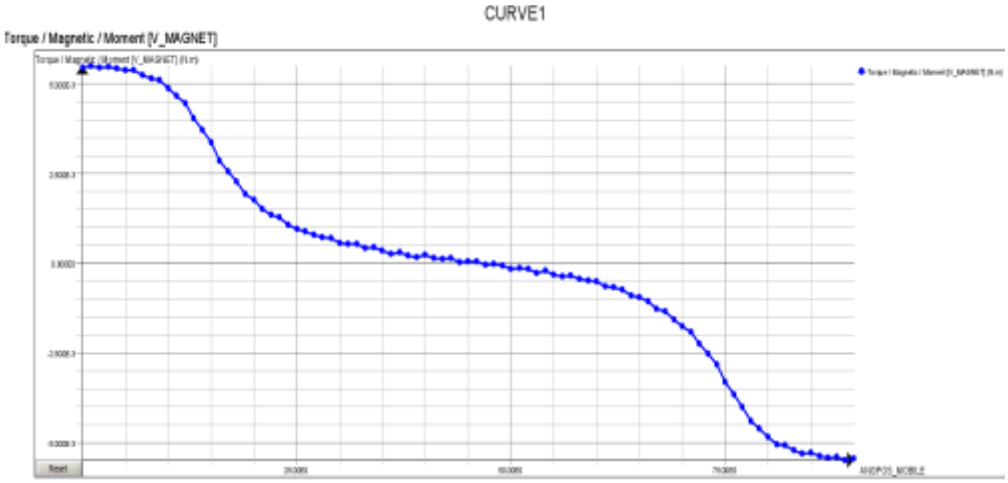

Note: The equilibrium position of the permanent magnet is 45°.

4.3.3. Plot a 2D curve of the magnetic field along a path

Goal

A 2D curve of the magnetic field along a path surrounding the magnet of the transducer is computed and displayed.

Data (1)

The characteristics* of the computation step are presented in the table below.

Scenario and **computation step selection**		
Scenario	**Computation step**	
	Parameter name	**Value**
CASE2	ANGPOS_MOBILE	45°

* These characteristics are located in the dialog box below the data tree.

Data (2)

The characteristics of the path are presented in the table below.

Path defined by **2 points**					
Name	**Comment**	**Mechanical set**	**Definition**	**Color**	**Region**
MAGNET_ PATH	Path surrounding the magnet	MOBILE	by coordinates	Black	MAGNET

Path defined by coordinates								
Path points								
Starting point				**Ending point**				**Sampling rate**
Coord. system	**Coordinates**			**Coord. system**	**Coordinates**			
	1st	**2nd**	**3rd**		**1st**	**2nd**	**3rd**	
XY1	0	-20	7.5	XY1	0	20	7.5	50
XY1	0	20	7.5	XY1	0	20	2.5	25
XY1	0	20	2.5	XY1	0	-20	2.5	50
XY1	0	-20	2.5	XY1	0	-20	7.5	25

☞ **Support → Path → New**

Outline

The MAGNET_PATH is presented in the figure below.

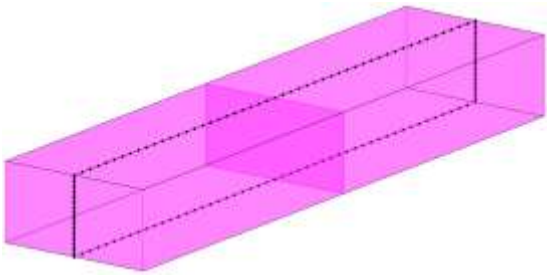

Continued on next page

Data (3)

The characteristics of the curve are presented in the table below.

2D curve (XYZ path)			
Name	**Path**	**Quantity**	**Formula**
MAG_FIELD_MAGNET2	MAGNET_PATH	Magnetic field / Magnitude	ModV(H)

☞ **Curve → 2D curve (Path) → New 2D curve (Path)**

Action

Change the appearance of the graphic:
- set “line” for the curve style, in quantities tab
- replace the blue color by the red, in quantities tab

Result

The curve is displayed as presented in the figure below.

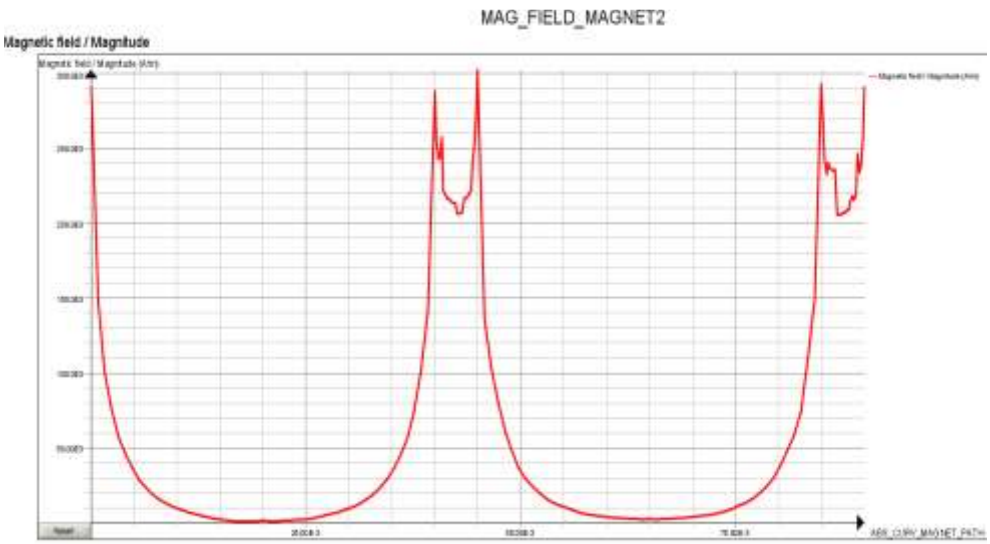

4.3.4. Compare two 2D curves of the magnetic field along the same path

Goal

The aim is to compare the magnetic field around the magnet with two different angular positions, at 0° and at 45°.

Action (1)

Copy the Magnet_Case1.txt file in the current directory and import it into Flux environment.

☞ **Curve → 2D curve (path) → Import a 2D curve – Flux file (txt)**

Action (2)

Superimpose the two 2D curves.

☞ **Curve → 2D curve (path) → Superimpose 2D curves (path)**

Action (3)

Change the appearance of the graphic:
- open the dropdown menu and select “Absolute”
- set “line” for the two curves style, in quantities tab
- replace the blue color by the red for the first graphic, in quantities tab

Result

The curves are displayed as presented in the figure below.

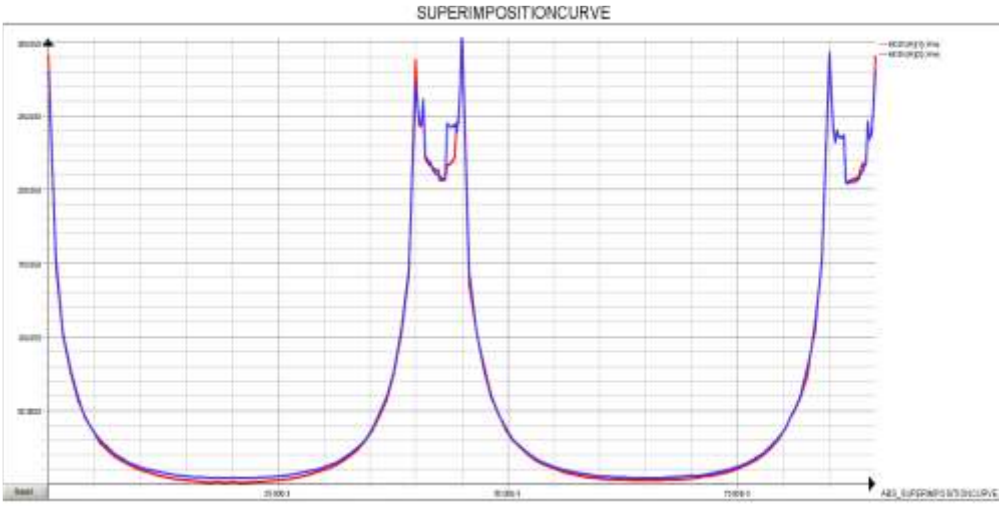

5. Case 3: coupled load kinematic model

Case 3

The third case is a study using a coupled load kinematic model.

In the third case, a transient magnetic analysis of the transducer is performed. The dynamic behaviour of the magnet is studied for a period of 10 s with a step of 0.25 s. The two coils are supplied with the same current of 0.06 A.

Starting Flux project

The starting project is the Flux project **GEO_MESH_PHYS.FLU**.
This project contains:

- the geometry description of the transducer
- the mesh of the computation domain
- the initial physical description of the transducer

New Flux project

The new Flux project is **CASE3.FLU**.

Contents

This chapter contains the following topics:

5.1. Case 3: physical description

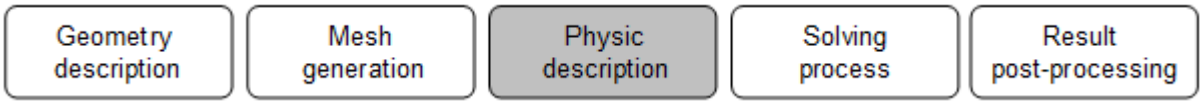

Introduction

This section explains how to prepare and solve case 3.

Contents

This section contains the following topics:

5.1.1. Define the physical application

Goal

In order to study the dynamic behaviour of the magnet, the physical application has to be replaced.

Action

Delete the Magneto Static 3D application.

☞ **Application → Delete current application**

Data

The characteristics of the new application are presented in the table below.

Transient Magnetic 3D application					
Formulation model				Coils coefficient	Transient initialization
Formulation model	Approx. functions	Approx. for scalar variable	Approx. for vector variable		
Automatic formulations	Nodal finite elements	Automatic	Automatic	Automatic coefficient	0 initial solution

☞ **Application → Define → Magnetic → Transient Static 3D**

5.1.2. Create mechanical sets

Goal

Two mechanical sets are created to define kinematic properties of the transducer:

- one mechanical set for the fixed part of the transducer
- one mechanical set for the relative displacement of the moving part of the transducer

Data

The characteristics of the mechanical sets are presented in the table below.

Fixed mechanical set	
Name	**Comment**
FIXED	Fixed part

Mechanical set of **rotation around one axis**							
Name	**Comment**	**Rotation axis**	**Coord. system**	**Pivot point coordinates**			**Kinematics**
				1st	**2nd**	**3rd**	
MOBILE	Moving part	parallel to Z-axis	MOBILE	0	0	0	Coupled load

Mechanical set of **rotation around one axis**						
General		**Internal characteristics**				
Pos.	**Vel.**	**Type of load**	**Moment of inertia**	**Friction coefficient**		
				constant	**viscous**	**∝ square speed**
0	0	Inertia, friction coefficients and spring	0	0	0	0

Mechanical set : Kinematics				
External characteristics				
Type of load	**Moment of inertia**	**Friction coefficient**		
		constant	**viscous**	**∝ square speed**
Inertia, friction coefficients and spring	1E-3	0	1.74533E-5	0

☞ **Physics → Mechanical set → New** 

5.1.3. Modify the physical properties

Goal

As the Magneto Static 3D application has been deleted, the physical properties have to be reset as follows:

- to activate volume regions in the Transient Magnetic application, all the volume regions are modified
- to orient the permanent magnet, the coordinate system of its volume region is modified
- to define the relation between coils and mechanical sets, the two coils of the transducer are included in the fixed mechanical set

Data (1)

The modified characteristics of volume regions are presented in the table below.

Volume region					
Name	**Comment**	**Type**	**Material**	**Color**	**Mechanical set**
FIXED_AIR	Air volumes in contact with the frame	Air or vacuum region	-	Turquoise	FIXED
FRAME	Frame volumes	Magnetic non-conducting region	STEEL	Cyan	FIXED
INFINITE	Air volumes in the infinite box	Air or vacuum region	-	Turquoise	FIXED
MAGNET	Permanent magnet volumes	Magnetic non-conducting region	SMCO	Magenta	MOBILE
MOBILE_AIR	Air volumes in contact with the permanent magnet	Air or vacuum region	-	Yellow	MOBILE

Action

Orient the SMCO material for the MAGNET region in the MOBILE coordinate system.

☞ **Physics → Material → Orient material for volume region** 

Continued on next page

Data (2)

The modified characteristics of the coils are presented in the table below.

Rectangular coil: geometric definition					
Coil					
Number	**Coord. system**	**Center**	**Dimension**		**Filet radius**
			Along X	**Along Y**	
1	COIL_A	0, 0, 0	2*Z_MAG+7	44	2
2	COIL_B	0, 0, 0	2*Z_MAG+7	44	2

Rectangular coil: geometric definition			
Coil section			**Mechanical set**
Type	**Height**	**Width**	
Rectangle	2	1	**FIXED**
Rectangle	2	1	**FIXED**

5.2. Case 3: solving process

Geometry description	Mesh generation	Physic description	Solving process	Result post-processing

Introduction

This section explains how to prepare and solve case 3.

Data

The characteristics of the solving scenario are presented in the table below.

Solving scenario		
Name	**Comment**	**Control of transient state**
CASE3	Coupled load kinematic model	Control by time

Solving scenario				
Parameter control				
Controlled parameter	**Interval**			
	Lower limit	**Higher limit**	**Method**	**Step value**
TIME	0.0	10.0	Step value	0.25

☞ Solving → Solving scenario → New

☞ Solving → Solve

5.3. Case 3: results post-processing

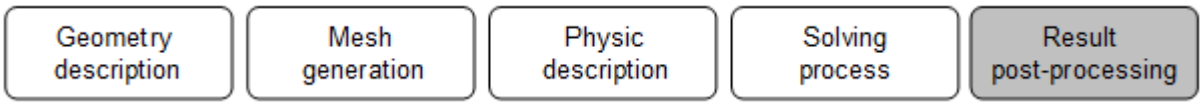

Introduction

This section explains how to analyze the principal results of case 3.

Contents

This section contains the following topics:

5.3.1. Compute the magnetic flux density on a point

Data

The characteristics of the computation are presented below.

Quantities computation on **points**			
Name	**Comment**	**Quantity**	**Formula**
POINT1	Edge of the magnet	Magnetic flux density / Magnitude [T]	ModV(B)

Point defined by its **coordinates**				
Coordinates			**Coord. system**	**Region**
First	**Second**	**Third**		
13.68	-14.59	7.5	XY1	MAGNET

☞ **Computation → On point → New session Quantities computation on points**

Result

The results are presented in the figures below.

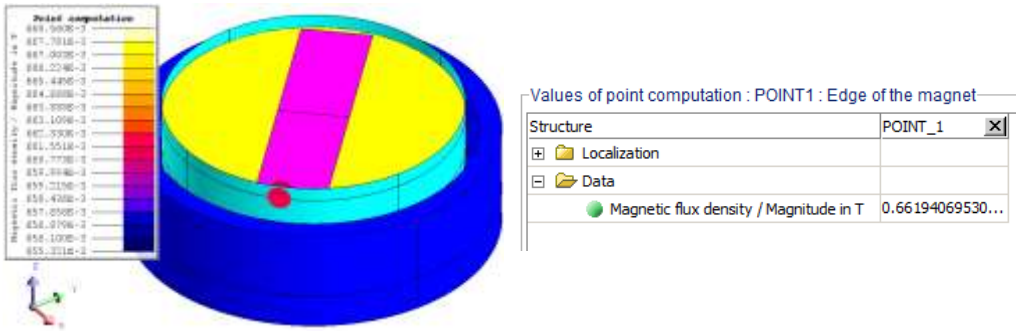

5.3.2. Compute the magnetic torque on volume regions

Data (1)

The characteristics of the torque axis are presented in the table below.

Torque Axis				
Direction	**Pivot point**			
	Coordinate system	**Coordinates**		
		First	**Second**	**Third**
Parallel to OZ	MOBILE	0	0	0

☞ **Support → Torque_axis → Edit**

Data (2)

The characteristics of the magnetic torque computation are presented in the table below.

Magnetic torque computed on **volume regions**			
Name	**Region**		
	Spatial group	**Quantity**	**Formula**
TORQUE1	V_MAGNET	Torque / Magnetic / Moment [N.m]	TMag(V_MAGNET)

☞ **Computation → On physical entity → Compute**

Result

The result is presented in the figure below.

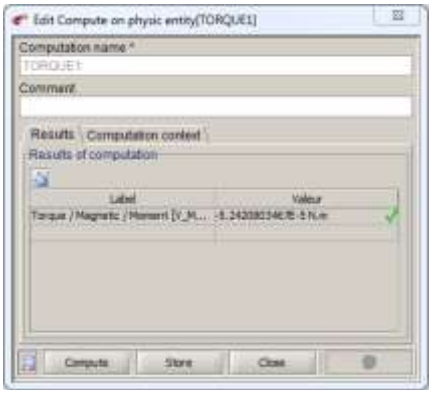

5.3.3. Plot 2D curves of the magnet angular position, angular speed and electromagnetic torque versus time

Data (1)

The characteristics of the curve are presented in the table below.

2D curve (I/O parameter)					
Name	Comment	Parameter			
		Name	Current value	Limit min	Limit max
CURVE1	Magnet angular position	TIME	-	0.0	10.0

2D curve (I/O parameter)		
Formula on ordinate : Mechanical set		
Mechanical set	Rotation	Formula
MOBILE	Angular position	AngPos(MOBILE)

☞ Curve → 2D Curve (I/O parameter) → New 2D Curve (I/O parameter)

Result (1)

The CURVE1 shows the variation of magnet angular position versus time.

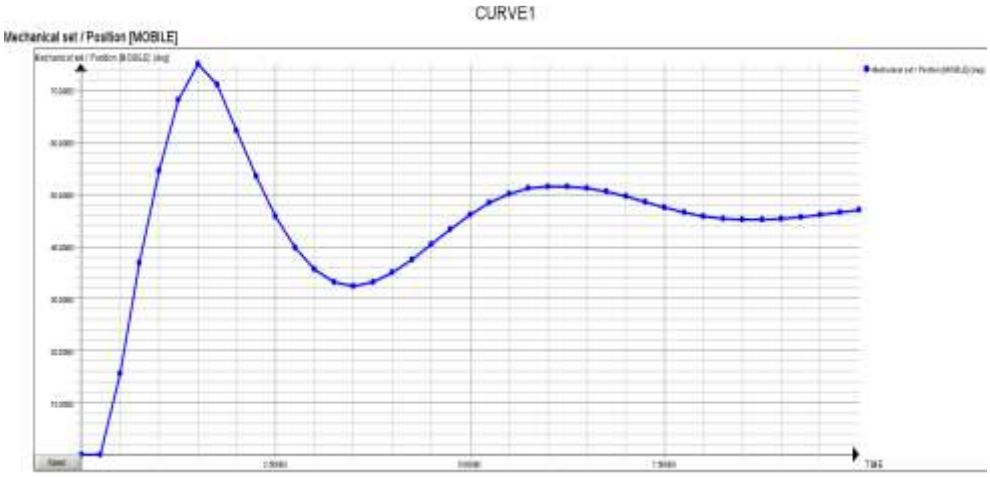

Continued on next page

Data (2)

The characteristics of the curve are presented in the table below.

2D curve (I/O parameter)					
Name	**Comment**	**Parameter**			
		Name	**Current value**	**Limit min**	**Limit max**
CURVE2	Magnet angular speed	TIME	-	0.0	10.0

2D curve (I/O parameter)		
Formula on ordinate : Mechanical set		
Mechanical set	**Rotation**	**Formula**
MOBILE	Angular speed	AngSpeed(MOBILE)

☞ **Curve → 2D Curve (I/O parameter) → New 2D Curve (I/O parameter)**

Result (2)

The CURVE2 shows the variation of magnet angular speed versus time.

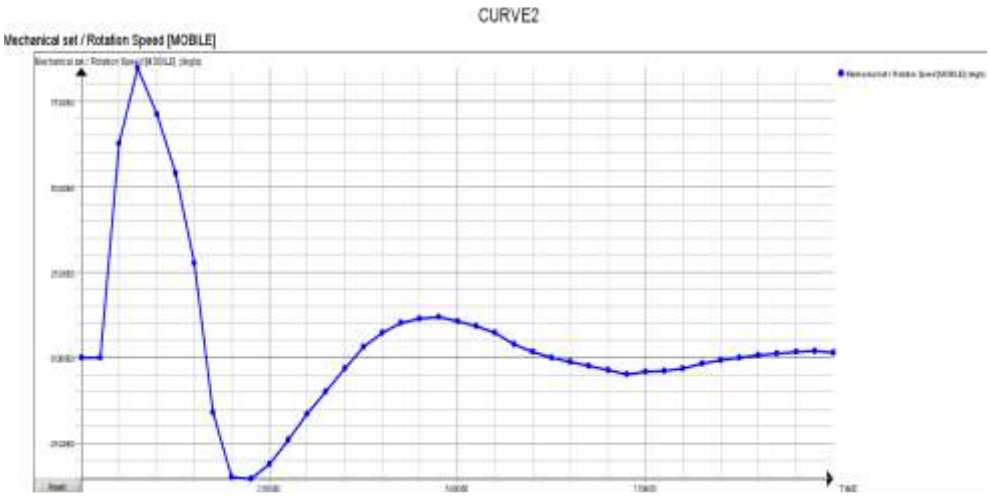

Continued on next page

Data (3)

The characteristics of the curve are presented in the table below.

2D curve (I/O parameter)					
Name	**Comment**	**Parameter**			
		Name	**Current value**	**Limit min**	**Limit max**
CURVE3	Electromagnetic torque	TIME	-	0.0	10.0

2D curve (I/O parameter)		
Formula on ordinate : Mechanical set		
Mechanical set	**Rotation**	**Formula**
MOBILE	Electromagnetic torque	TorqueElecMag(MOBILE)

☞ **Curve → 2D Curve (I/O parameter) → New 2D Curve (I/O parameter)**

Result (3)

The CURVE3 shows the variation of electromagnetic torque versus time.

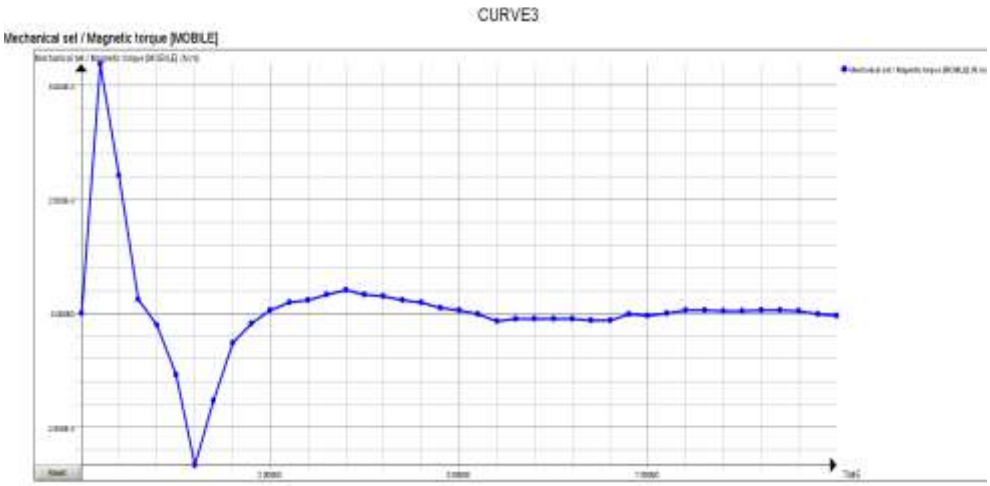

6. Case 4: imposed speed kinematic model

Case 4

The fourth case is a study using an imposed speed kinematic model.

In the last case, a transient magnetic analysis of the transducer is performed. The movable part of the device is driven at a constant speed. The induced voltage on a coil is studied for a period of 0.06 s with a step of $0.5e^{-3}$ s. The two coils are not supplied.

Starting Flux project

The starting project is the Flux project **GEO_MESH_PHYS.FLU**.
This project contains:

- the geometry description of the transducer
- the mesh of the computation domain
- the initial physical description of the transducer

New Flux project

The new Flux project is **CASE4.FLU**.

Contents

This chapter contains the following topics:

6.1. Case 4: physical description

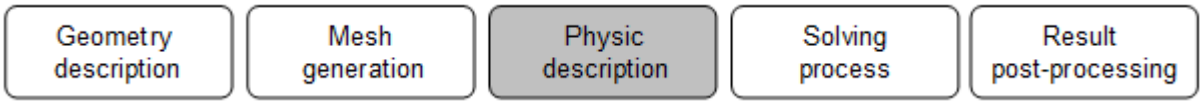

Introduction

This section explains how to prepare and solve case 4.

Contents

This section contains the following topics:

6.1.1. Define the physical application

Goal

In order to study the dynamic behaviour of the coils conductors, the physical application has to be replaced.

Action

Delete the Magneto Static 3D application.

☞ **Application → Delete current application**

Data

The characteristics of the new application are presented in the table below.

Transient Magnetic 3D application					
Formulation model				Coils coefficient	Transient initialization
Formulation model	Approx. functions	Approx. for scalar variable	Approx. for vector variable		
Automatic formulations	Nodal finite elements	Automatic	Automatic	Automatic coefficient	0 initial solution

☞ **Application → Define → Magnetic → Transient Static 3D**

6.1.2. Create mechanical sets

Goal

Two mechanical sets are created to define kinematic properties of the transducer:

- one mechanical set for the fixed part of the transducer
- one mechanical set for the relative displacement of the moving part of the transducer

Data

The characteristics of the mechanical sets are presented in the table below.

Fixed mechanical set	
Name	**Comment**
FIXED	Fixed part

Mechanical set of **rotation around one axis**							
Name	**Comment**	**Rotation axis**	**Coord. system**	**Pivot point coordinates**			**Kinematics**
				1st	**2nd**	**3rd**	
MOBILE	Moving part	parallel to Z-axis	MOBILE	0	0	0	Imposed speed

Mechanical set of **rotation around one axis**						
General		**Internal characteristics**				
Pos.	**Vel.**	**Type of load**	**Moment of inertia**	**Friction coefficient**		
				constant	**viscous**	**∝ square speed**
0	3000	Inertia, friction coefficients and spring	1E-3	0	0	0

☞ **Physics → Mechanical set → New** 

6.1.3. Modify the physical properties – regions

Goal

As the Magneto Static 3D application has been deleted, the physical properties of the regions have to be reset as follows:

- to activate volume regions in the Transient Magnetic application, all the volume regions are modified
- to orient the permanent magnet, the coordinate system of its volume region is modified

Data

The modified characteristics of volume regions are presented in the table below.

Volume region					
Name	**Comment**	**Type**	**Material**	**Color**	**Mechanical set**
FIXED_AIR	Air volumes in contact with the frame	Air or vacuum region	-	Turquoise	FIXED
FRAME	Frame volumes	Magnetic non-conducting region	STEEL	Cyan	FIXED
INFINITE	Air volumes in the infinite box	Air or vacuum region	-	Turquoise	FIXED
MAGNET	Permanent magnet volumes	Magnetic non-conducting region	SMCO	Magenta	MOBILE
MOBILE_AIR	Air volumes in contact with the permanent magnet	Air or vacuum region	-	Yellow	MOBILE

Action

Orient the SMCO material for the MAGNET region in the MOBILE coordinate system.

☞ **Physics → Material → Orient material for volume region** 

6.1.4. Modify the physical properties – sources

Goal

As the Magneto Static 3D application has been deleted, the physical properties of the sources have to be reset as follows:

- two unused coil conductors COILCONDUCTOR_A and COILCONDUCTOR_B are deleted
- to link the non-meshed coils to the electric components (of stranded coil type) of the imported electric circuit and to define the relation between coils and mechanical sets, the two coils of the transducer are modified

Action

Delete both COILCONDUCTOR_A and COILCONDUCTOR_B.

☞ **Physics → Electrical components → Stranded coil conductor → Delete**

Data (1)

The characteristics of the electric components are presented in the table below.

Name	Electric component	Characteristics	
		Type	Resistance
C1	Stranded coil conductor	belonging to a circuit	0.1E-6 Ω
C2	Stranded coil conductor	belonging to a circuit	0.1E-6 Ω
R1	Resistor	-	1.0E+6 Ω
R2	Resistor	-	1.0E+6 Ω
Z1	Ground	-	-

☞ **Physics → Circuit → Circuit editor context**

Outline

The electric circuit is shown in the figure below.

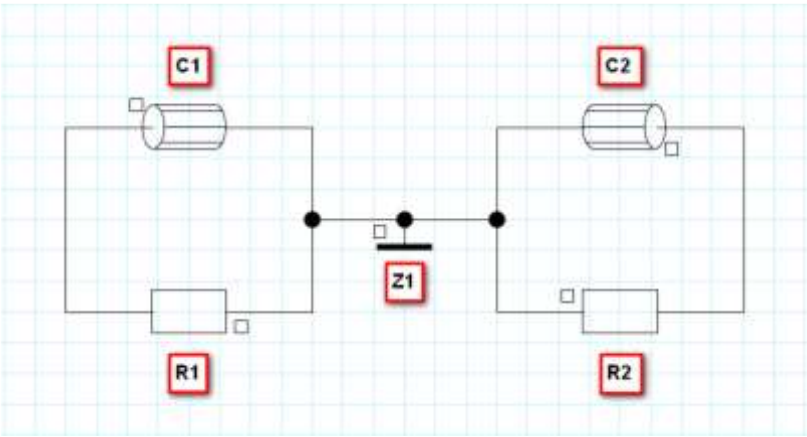

Continued on next page

Data (2)

The modified characteristics of the coils are presented in the table below.

Rectangular coil: geometric definition					
Coil					
Number	**Coordinate system**	**Center**	**Dimension**		**Filet radius**
			Along X	**Along Y**	
1	COIL_A	0, 0, 0	2*Z_MAG+7	44	2
2	COIL_B	0, 0, 0	2*Z_MAG+7	44	2

Rectangular coil: geometric definition			
Coil section			**Mechanical set**
Type	**Height**	**Width**	
Rectangle	2	1	**FIXED**
Rectangle	2	1	**FIXED**

Rectangular coil: electrical definition			
Electric component associated with the coil	**Number of turns**	**Conductors in series or in parallel**	**Symmetries and periodicities**
C1	1000	… in series	duplication
C2	1000	… in series	duplication

6.2. Case 4: solving process

Geometry description	Mesh generation	Physic description	Solving process	Result post-processing

Goal

The scenario is defined for a transient solving process; then case 4 is solved.

Data

The characteristics of the solving scenario are presented in the table below.

Solving scenario		
Name	**Comment**	**Control of transient state**
CASE4	Imposed speed kinematic model	Control by time

Solving scenario				
Parameter control				
Controlled parameter	**Interval**			
	Lower limit	**Higher limit**	**Method**	**Step value**
TIME	0.0	0.06	Step value	0.5E-3

☞ Solving → Solving scenario → New 

☞ Solving → Solve 

6.3. Case 4: results post-processing

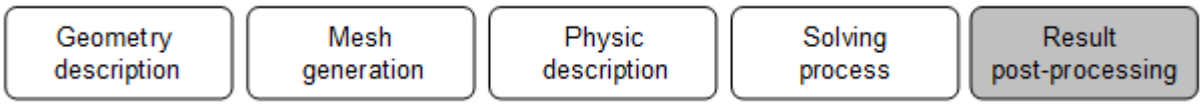

Introduction

This section explains how to analyze the principal results of case 4.

Contents

This section contains the following topics:

6.3.1. Display isovalues of the magnetic flux density on volume regions

Goal

The magnetic flux density through the magnet is visualized at two different time step in order to observe the trend of the magnetic flux.

Data (1)

The characteristics* of the computation step are presented in the table below.

Scenario and **computation step selection**		
Scenario	**Computation step**	
	Parameter name	**Value**
CASE4	TIME	0.001s

* These characteristics are located in the dialog box below the data tree.

Data (2)

The characteristics of isovalues are presented in the table below.

Isovalues on **volume regions**			
Name	**Type of Support**	**Supports**	**Formula**
ISOVAL1	Spatial group	V_FRAME	B
		V_MAGNET	

☞ **Graphic → Isovalues → New** 

Result (1)

The isovalues of the magnetic flux density are displayed below.

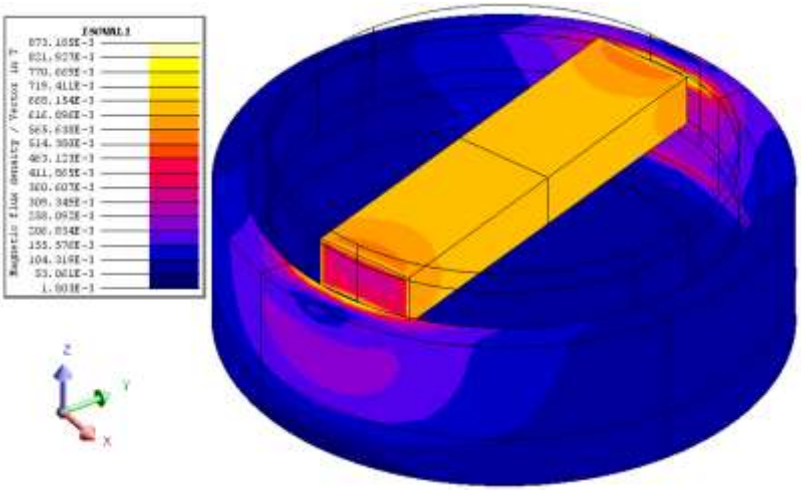

Continued on next page

Data (3)

The characteristics* of the computation step are presented in the table below.

Scenario and **computation step selection**		
Scenario	**Computation step**	
	Parameter name	**Value**
CASE4	TIME	0.0025s

* These characteristics are located in the dialog box below the data tree.

Result (2)

The isovalues of the magnetic flux density are displayed below.

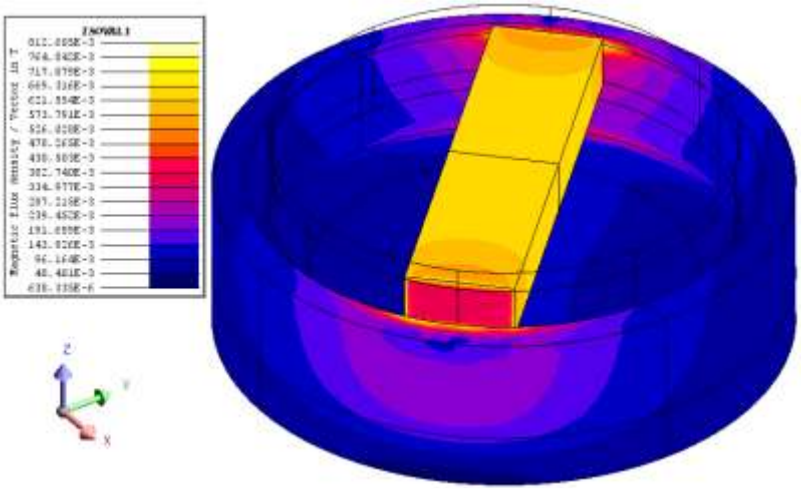

6.3.2. Display isolines of the magnetic flux density on a 2D grid

Goal

The magnetic flux density through the middle of the magnet is visualized in order to observe the gradient of the magnetic flux.
To carry out this work, a surface support has to be created:

- one 2D grid parallel to XY plane divides the magnet through its center

Data (1)

The characteristics of the 2D grid are presented in the tables below.

Rectangular 2D grid in XY plane: definition						
Name	**Comment**	**Coordinate system**	**Mechanical set**	**2D grid origin coordinates**		
				1st	**2nd**	**3rd**
MAGNET _2D	Grid across the magnet	MOBILE	MOBILE	0	0	0

Rectangular 2D grid in XY plane: definition					
Characteristics along X			**Characteristics along Y**		
Positive X	**Negative X**	**Number of elements**	**Positive Y**	**Negative Y**	**Number of elements**
4.9	4.9	10	19.9	19.9	40

Rectangular 2D grid in XY plane: appearance	
Visibility	**Color**
visible	red

☞ **Support → 2D grid → New** 

Note: It is advised to match one support to one region.

Data (2)

The characteristics of isoline are presented in the table below.

Isolines on **volume regions**			
Name	**Type of Support**	**Supports**	**Formula**
ISOLIN1	2D Grid	MAGNET_2D	B

☞ **Graphic → Isolines → New** 

Continued on next page

Result

The isolines of the magnetic flux density are displayed below.

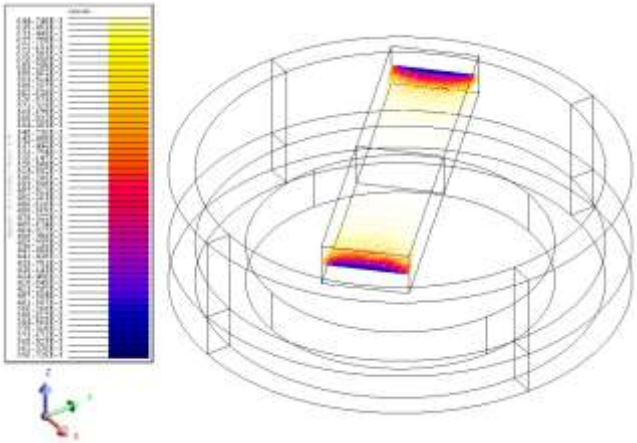

6.3.3. Create animation of isovalues of the magnetic flux density on the transducer versus time

Goal

The animation of isovalues of the magnetic flux density for different values of the supply current is created in order to observe the trend.

Data

The characteristics of the animation are presented in the table below.

Animation						
Name	General (Steps frequency: 1/2)					Display
	Pilot				Build options	Isovalues
	Parameters	Current value	Limit min	Limit max		
ANIMATION1	TIME	-	0.003	0.023	Build video	ISOVAL1

☞ Graphic →Animation → New

Result

The animation video is created in the project repertory in a .AVI file.

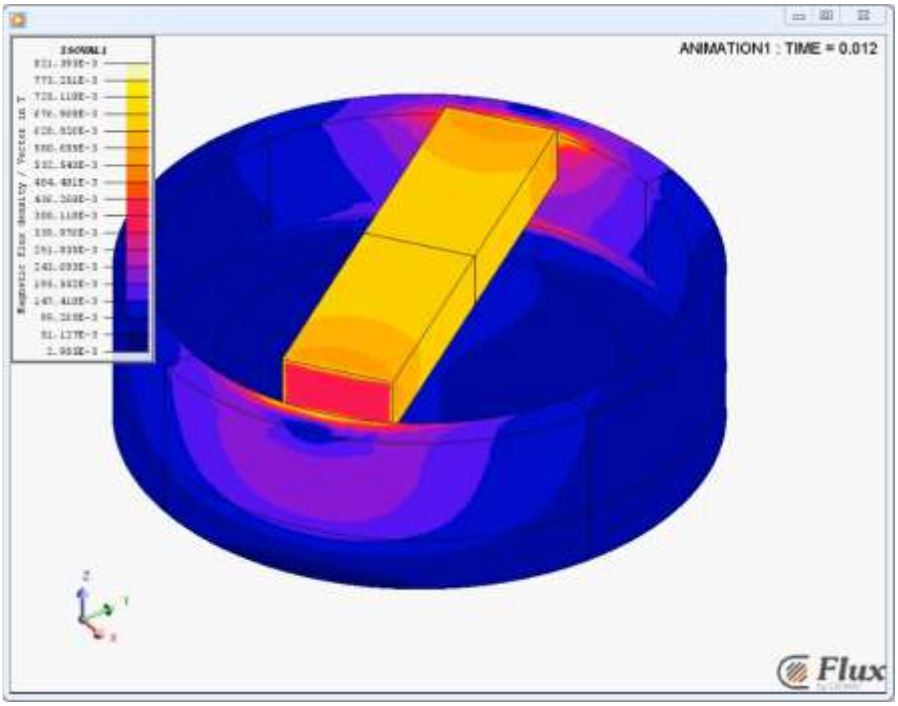

6.3.4. Plot a 2D curve of the induced voltage versus time

Data

The characteristics of the curve are presented in the table below.

2D curve (I/O parameter)					
Name	**Comment**	**Parameter**			
		Name	**Current value**	**Limit min**	**Limit max**
CURVE1	Induced voltage	TIME	-	0.0	0.06

2D curve (I/O parameter)		
Formula on ordinate : Circuit		
Type of electrical component	**Quantity**	**Formula**
Stranded coil conductor	Voltage [V]	U(C1)

☞ **Curve → 2D Curve (I/O parameter) → New 2D Curve (I/O parameter)**

Result

The CURVE1 shows the variation of induced voltage in the C1 coil versus time.

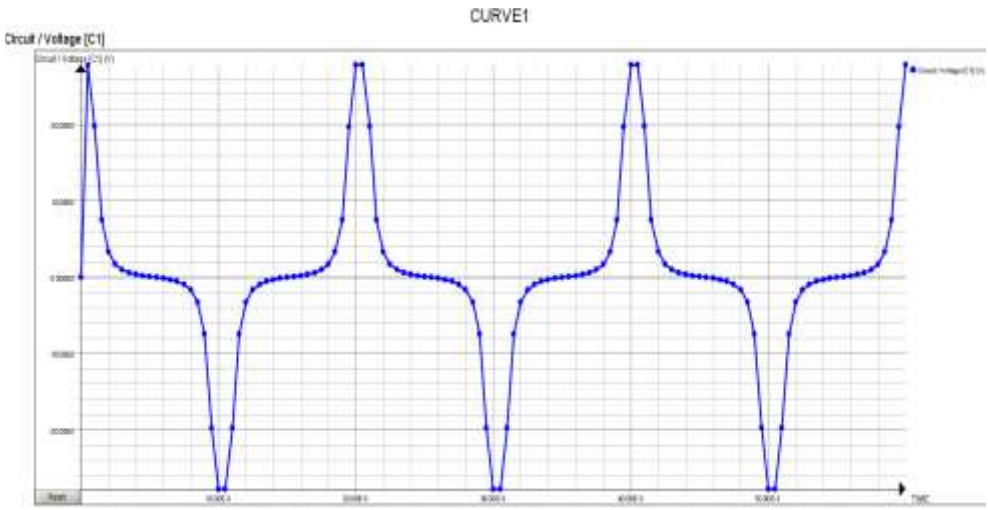

6.3.5. Create an automatic report

Goal

An automatic report is created in order to:
- visualize the geometry and the results
- check all the data of the project

Action (1)

Load the AutomaticReport macro in the Macros directory.

☞ **Project → Macro → Load**

Action (2)

Execute the AutomaticReport macro.

☞ **Project → Macro → Run**

Result

A directory is created in the current project directory which contains:
- the screenshots
- the curves
- the report in html format
- the report in txt format